ORDER NO. KM49411912C1
F0

Service Manual

WIRELESS PHONE

and Technical Guide

Telephone Equipment

KX-T9500

(for U.S.A.)

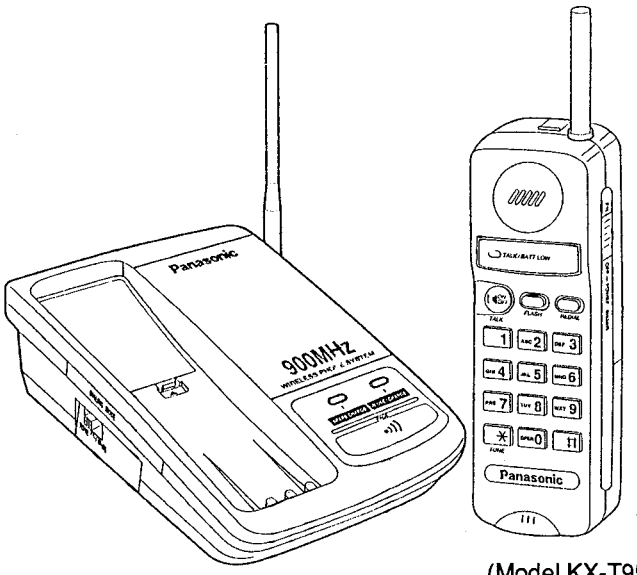

(Model KX-T9500H) (Model KX-T9500R)

SPECIFICATIONS\ТЕХНИЧЕСКИЕ ХАРАКТЕРИСТИКИ
ADJUSTMENTS \РЕГУЛИРОВКИ
CPU DATA\ИНФОРМАЦИЯ О ПРОЦЕССОРЕ
FREQUENCY TABLE\ТАБЛИЦА РАБОЧИХ ЧАСТОТ
SCHEMATIC DIAGRAM\ПРИНЦИПИАЛЬНЫЕ СХЕМЫ
BLOCK DIAGRAM\БЛОК - СХЕМЫ
CABINET, MECHANICAL AND ELECTRICAL PARTS LOCATION\РАСПОЛОЖЕНИЕ МЕХАНИЧЕСКИХ И ЭЛЕКТРИЧЕСКИХ ЧАСТЕЙ
ACCESSORIES AND PACKING MATERIALS\ПРИНАДЛЕЖНОСТИ И УПАКОВОЧНЫЕ МАТЕРИАЛЫ
FIXTURES AND TOOLS\ПРИСПОСОБЛЕНИЯ И ИНСТРУМЕНТЫ
REPLACEMENT PARTS LIST\СПИСОК ЗАПАСНЫХ ЧАСТЕЙ

Panasonic

© 1994 Kyushu Matsushita Electric Co., Ltd.
All rights reserved. Unauthorized copying and distribution is a violation of law.

■ SPECIFICATIONS

	Base Unit (KX-T9500H)	Portable Unit (KX-T9500R)
Power Source:	AC Adaptor (KX-A11-5)	Rechargeable Ni-Cd battery
Receiving Frequency:	60 channels within 926.1~927.87 MHz	60 channels within 902.1~903.87 MHz
Receiving Method:	Double super heterodyne	Double super heterodyne
Transmitting Frequency:	60 channels within 902.1~903.87 MHz	60 channels within 926.1~927.87 MHz
Oscillation Method:	PLL synthesizer	PLL synthesizer
Detecting Method:	Quadrature Discriminator	Quadrature Discriminator
Tolerance of OSC Frequency:	±3.6 kHz	±3.6 kHz
Modulation Method:	F3 (frequency modulation)	F3 (frequency modulation)
ID Code:	20-bit written in ROM	20-bit written in ROM
Dial Mode:		Tone (DTMF)/Pulse
Redial:		Up to 30 digits
Save:		Up to 30 digits
Power Consumption:		20 hrs at Standby, 3 hrs at Talk
Dimension (H×W×D):	2⅛"×5 27/32"×7 15/32" (54×148×190 mm)	7⅞"×2 5/32"×1 13/32" (200×55×36 mm)
Weight	0.95 lbs. (430 g) with battery	0.51 lbs. (230 g) with battery

Design and specifications are subject to change without notice.

ADJUSTMENTS (KX-T9500H)

After servicing the RF unit, never make adjustments without assembling the upper RF unit cover and the lower RF unit cover with screws.

Adjustment Preparations

1. Connect the main P.C. Board to RF unit by the extension cord.
2. Connect a distortion meter (with AC voltmeter) to the telephone line output on the base unit.
3. Pressing SW1, connect the AC adaptor to the AC jack of base unit. After hearing "pi" sound, release SW1.
4. Press twice PAGE button (Test Mode on CH1 Talk).

If your unit have below symptom, adjust for each item as table of adjustment on pages 6, 7.

Symptom	Remedy
Does not link between base unit and portable handset.	Adjust the adjustment items (A), (B) and (E).
The sound quality is wrong.	Adjust the adjustment item (D).
Transmission sound for receiver is unstable.	Adjust the adjustment item (C).

Item	Adjustment Item	Procedure
(A)	RX VCO Voltage Adjustment	Place the voltmeter probe at RF unit TP5 and adjust the voltage to 1.8 V using VC203. **(When TP5 voltage is within 1.8 V±0.5 V, no need of adjusting.)**
(B)	TX VCO Voltage Adjustment	Place the voltmeter probe at TP6 and adjust the voltage to 1.8 V using VC202. **(When TP6 voltage is within 1.8 V±0.5 V, no need of adjusting.)**
(C)	TX Adjustment	Connect the signal generator (926.125 MHz, 1 kHz modulation frequency, 3 kHz modulation +60 dBμ emf output level) to the RF block section TP A and GND. Adjust VR1 so that Tel Line output (600Ω Load) is set to −16 dBm.
(D)	Modulation	Connect a modulation meter and signal generator (926.125 MHz, 60 dBμV, unmodulation) in TPA and GND. Connect the AF oscillator (f=1 kHz, −30 dBm) to the telephone line output. Adjust VR4 to set the modulation to +2.8 kHz.
(E)	Standard Frequency Adjustment	Adjust VC201 so that transmission frequency is set 902.125 MHz $^{+0}_{-1}$ kHz. Connect frequency counter between TP A and GND.

RF Unit

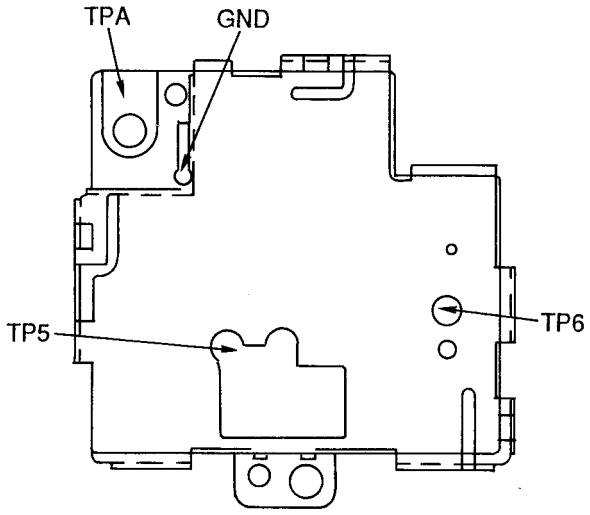

Fig. 12

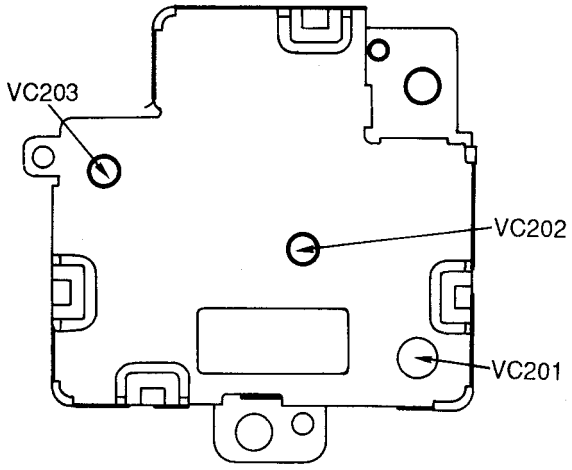

Fig. 13

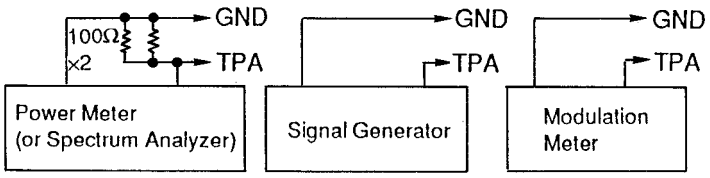

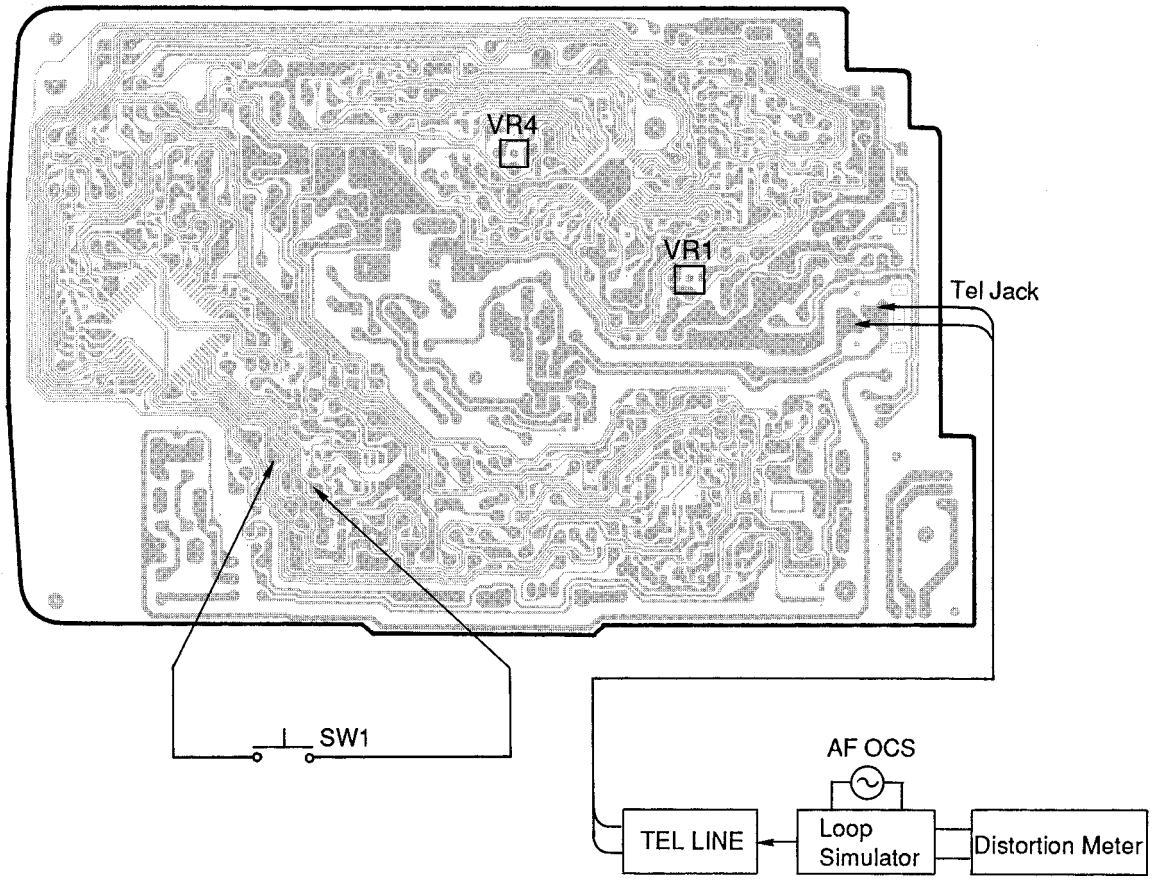

Fig. 14

ADJUSTMENTS (KX-T9500R)

After servicing the RF unit, never make adjustments without assembling the upper RF unit cover and the lower RF unit cover with screws.

Adjustment Preparations

1. Connect the main P.C. Board to RF unit by the extension cord.
2. Connect a distortion meter (with AC voltmeter) to the SPK terminals (TP3) on the portable handset.
3. Connect 3.9 V to the battery terminals.
4. After pressing [1], [9], [*] keys at the same time, turn Power SW on. After that, press Flash key (Test mode on standby).
5. Press Talk key (Test Mode on CH1 Talk).

If your unit have below symptom, adjust for each item as table of adjustment on pages 8, 9.

Symptom	Remedy
Does not link between base unit and portable handset.	Adjust the adjustment items (A), (B), (E) and (F).
Speaker level of portable handset is unstable.	Adjust the adjustment item (C).
Transmission sound for receiver is unstable.	Adjust the adjustment item (D).

Item	Adjustment Item	Procedure
(A)	RX VCO Voltage Adjustment	Place the voltmeter probe at TP5 and adjust the voltage to 1.5 V using VC203. **(When TP5 voltage is within 1.5 V±0.5 V, no need of adjusting.)**
(B)	TX VCO Voltage Adjustment	Place the voltmeter probe at TP6 and adjust the voltage to 1.5 V using VC202. **(When TP6 voltage is within 1.5 V±0.5 V, no need of adjusting.)**
(C)	SP Output Adjustment	Connect a signal generator (902. 125 MHz, 1 kHz modulation frequency, 2 kHz modulation, +60 dBμV emf output level) to the RF block section TP A. Adjust VR3 so that the speaker output is –30 dBm.
(D)	Modulation	Connect a modulation meter and signal generator (902.125 MHz, 60 dBμV, unmodulation) in TPA and GND. Connect an AF oscillator (f=1 kHz, –20 dBm level) to the MIC terminals (TP4) and V_{SS} on the portable handset. Adjust VR4 to set the modulation to 5.5 kHz Devi.
(E)	Standard Frequency Adjustment	Adjust VC210 so that transmission frequency is set 902.125 MHz $^{+0}_{-1}$ kHz. Connect frequency counter between TP A and GND.
(F)	Electric Detective Adjustment	Input S.S.G. (902.125 MHz, 60 dBμV, 3 kHz Devi) between TP A and GND. Adjust VR1 so that TP5 level is set to –15.5 dBm.

Note: When selecting optional channel, press [2] [3] keys after pressing Flash key of 4 item (ex. CH23).
Next press Talk key (Test Mode on CH23 Talk).

RF Unit

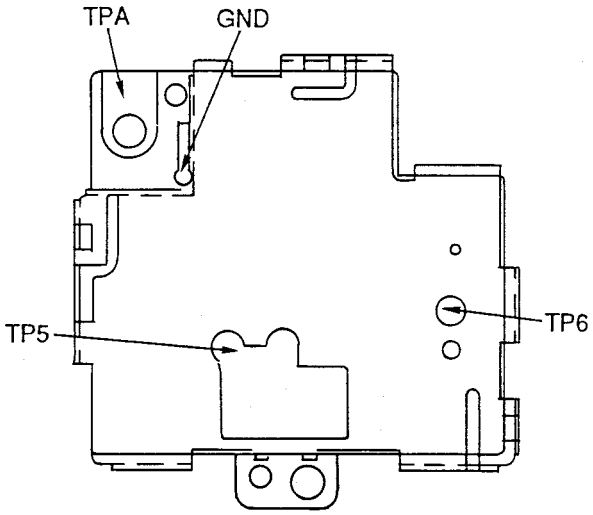

Fig. 15

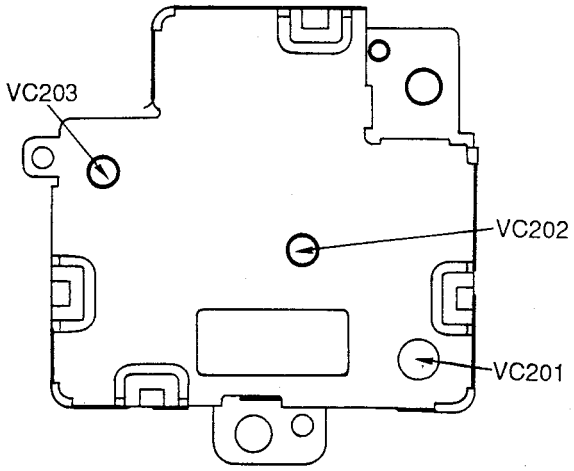

Fig. 16

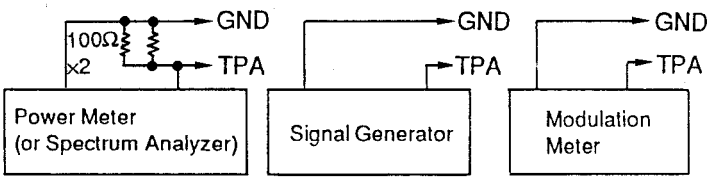

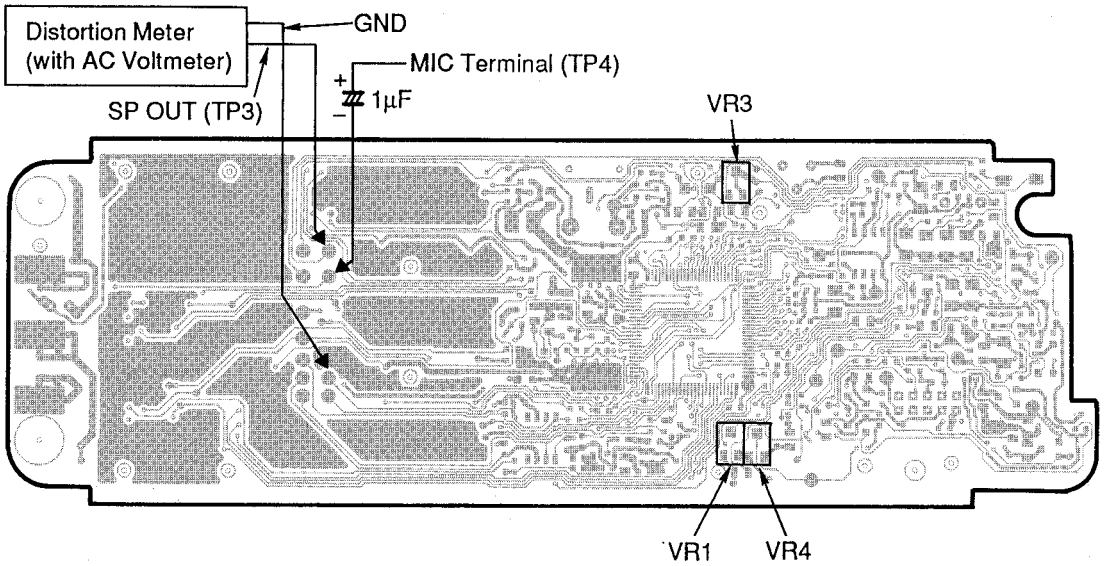

Fig. 17

CPU DATA KX-T9500H (Base Unit)

IC4 MN150808KJAG

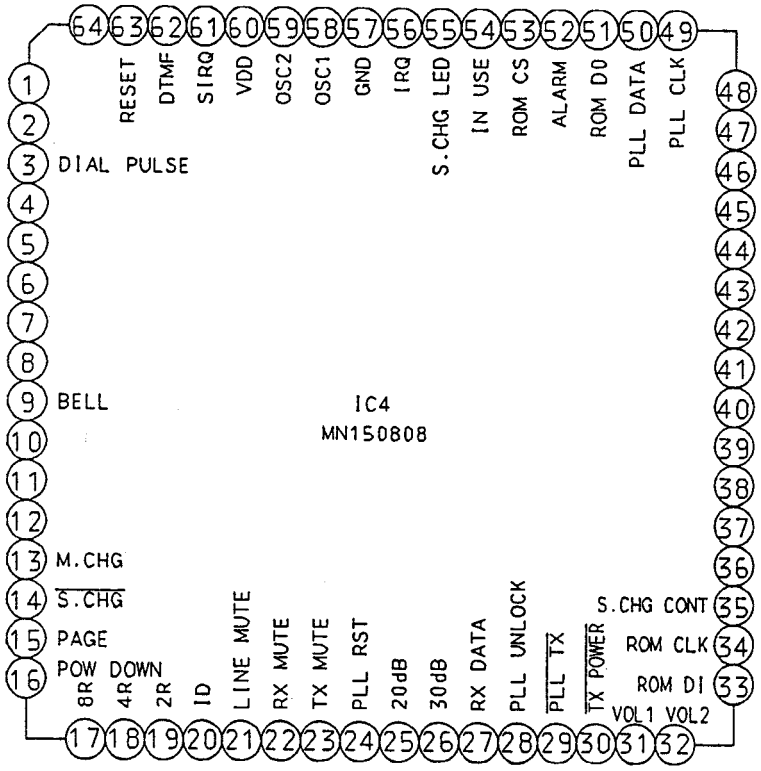

Fig. 18

Pin	Description	I/O	High	High-Z	Low	Pin	Description	I/O	High	High-Z	Low
1	(0.12 mA RLY)	O	ON			33	ROM_DIN	O			
2	HOOK RLY	O	ON			34	ROM_CLK	O			
3	DP	O	MAKE		BREAK	35					
4	NSA	O	ON			36					
5	EARTH RLY	O	ON			37	Strobe 2	O			Strobe
6	ALARM MUTE	O	ON			38	Strobe 3	O			Strobe
7	MIC MUTE	O	ON			39	Strobe 4	O			Strobe
8	SP MUTE	O	ON			40	Strobe 5	O			Strobe
9	BELL	I	BELL Reception			41	KEY DATA IN	I	Normal		Key IN
10	LINE VOL	I	Without VOL		With VOL	42	KEY DATA IN	I	Normal		Key IN
11	(DIAL TONE)	I	With TONE		Without TONE	43	KEY DATA IN	I	Normal		Key IN
12	GND		—	—	Normal	44	KEY DATA IN	I	Normal		Key IN
13	CHARGE	I			CHARGE	45	Indiv. LED	O	ON		
14	S_CHARGE	I			CHARGE	46	Indiv. LED	O	ON		
15	PAGE KEY	I			P.DOWN	47	Indiv. LED	O	ON		
16	POWER DOWN	I	Normal		P.DOWN	48	Indiv. LED	O	ON		
17	TX DATA 8R	O				49	PLL_CLK	O			
18	TX DATA 4R	O				50	PLL_DATA	O			
19	TX DATA 2R	O				51	ROM_DOUT	I			
20	TX DATA R	O				52	ALARM	O	ON		
21	LINE MUTE	O	ON		Normal	53	ROM_CS	O	Active		Normal
22	$\overline{\text{RX MUTE}}$	O	Normal		ON	54	IN USE LED	O	ON		
23	$\overline{\text{TX MUTE}}$	O	ON		Normal	55	Spare CHARGE LED	O	ON		
24	$\overline{\text{PLL_RST}}$	O	Normal		ON	56	External Interrupt Input	I	Normal	—	—
25	FLS1 (20)	I	Weak electric field		Input Sens.	57					
26	FLS2 (30)	I	Weak electric field		Input Sens.	58	CPU Clock	I			
27	RX DATA	I				59	(3.58 MHz)	O			
28	PLL_UNLOCK	I	UNLOCK		LOCK	60	Power Source		Normal	—	—
29	$\overline{\text{PLL_TX}}$	O	—	Normal	ON	61	External Interrupt Input	I	Normal	—	—
30	$\overline{\text{TX POWER}}$	O	—	POW_OFF	POW_ON	62		O			
31	VOL. 1	O	—	OFF	ON	63	$\overline{\text{RESET}}$ Input	I	Normal		RESET
32	VOL. 2	O	—	OFF	ON	64					

■ MN150808KJAG (IC4) TERMINALS EXPLANATION

Pin No.	Pin Name	Classification	I/O	Description
60 57	V_{DD} V_{SS}	Power supply		For connection of +2.2~5.5 V to Vdd and 0 V to Vss.
58 59	OSC1 OSC2	Clock input Clock output	I O	Oscillation terminal for connection of an oscillator. Feedback resistance is built-in.
63	RST	Reset input	I	RESET mode is on when "L" level is input for 1 machine cycle or more. The pull-up resistance and the Schmitt input circuit are built in. After the RESET mode is off, the internal RESET is released after 2^{13} count of OSC input clock.
64	SYNC	Synchronous signal output	O	Internal timing signal is output at every 1 machine cycle.
56	IRQ	External interrupt input	I	For interrupt at a negative edge. The Schmitt input circuit is built in. The pull-up resistance can be designated by software option.
61	SIRQ	External Interrupt Input	I	For unconditional interrupt at a negative edge. The Schmitt input circuit is built in. The pull-up resistance can be designated by software option.
49	SBT (PCO)	Serial interface clock I/O	I/O (I)	I/O terminal for transmission and reception of serial interface clock. This can be used as the normal input port. The Schmitt input circuit is built in. The pull-up resistance can be designated by software option.
50	SBO (PC1)	Serial interface data output	O (I)	Output terminal for transmission of the serial interface data (8-bit serial data). This can also be used as the normal input port. The pull-up resistance can be designated by software option.
51	SBI (PC2)	Serial interface data intput	I (I)	Input terminal for reception of the serial interface data (8-bit serial data). This can also be used as the normal input port. The Schmitt input circuit is built in. The pull-up resistance can be designated by software option.
52	TC20 (PC3)	8-bit Presettable counter data output	O (I)	Output termnal of overflow signal of the built-in 8-bit presettable counter. This can also be used as the normal input port. The pull-up resistance can be designated by software option.
62	DTMF	DTMF signal output	O	Output terminal of the staircase signal in which two types of frequency signals are mixed. ON/OFF of output can be controlled by program.
45~48, 53~55	PA0~ PA3, PD0~ PD2	Large current or direct driving of LED	I/O	I/O ports of 4-bit parallel data. The output structure (Nch open drain/pushable) and the pull-up resistance can be designated by software option. The LED can be driven directly.
1~40	P00~ P93	Parallel data I/O	I/O	I/O ports of 4-bit parallel data. The output structure (Nch open drain/pushable) and the pull-up resistance can be designated by software option.
41~44	PB0~ PB3	Parallel data input	I	Input port of 4-bit parallel data. The Schmitt input circuit is built in. This can also be used as the interrupt port (negative edge) by software option. The pull-up resistance can be designated by software option.

CPU DATA KX-T9500R (Portable Unit)

IC6 PQVI4829B99H

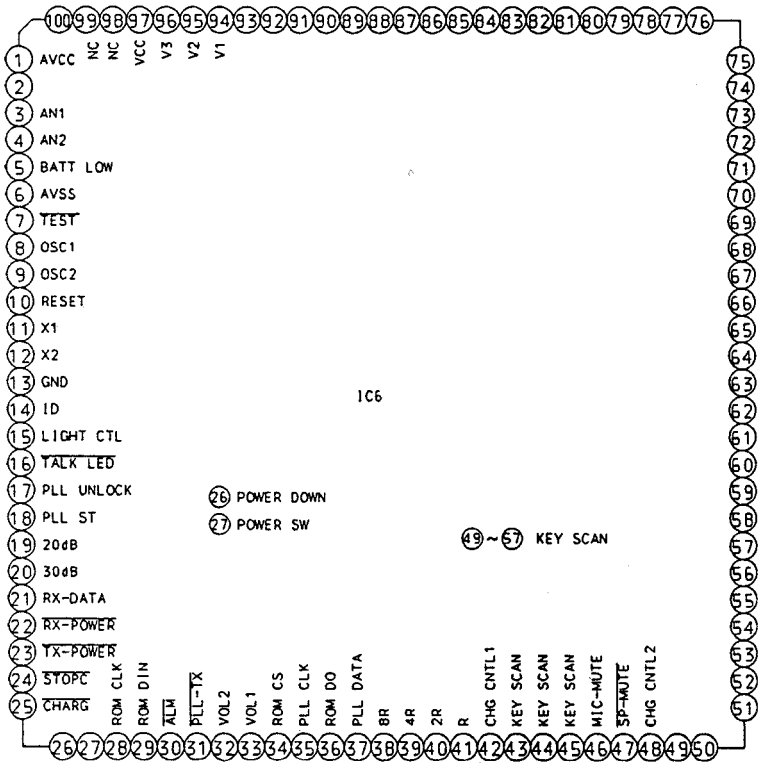

Fig. 19

Pin	Description	I/O	High	High-Z	Low	Pin	Description	I/O	High	High-Z	Low
1			Normal	—	—	36	ID ROM_DOUT	I			
2			—	—	Normal	37	PLL_DATA	O			
3			—	—	Normal	38	TX DATA 8R	O			
4			—	—	Normal	39	TX DATA 4R	O			
5	BATT_LOW	I				40	TX DATA 2R	O			
6			—	—	Normal	41	TX DATA R	O			
7			Normal	—	—	42	CHGCTL1	O	Normal		Tricle
8	CPU Clock	I				43	SW DATA IN	I			
9	(4 MHz)	O				44	SW DATA IN	I			
10	RESET	I	RESET		Normal	45	SW DATA IN	I			
11	SUB Clock	I				46	MIC_MUTE	I	ON		Normal
12	(32.768 kHz)	O				47	SP_MUTE	O	Normal		ON
13	GND		—	—	Normal	48	(Not used)	O			Normal
14	CHARGE_ID	I	Normal		Base Unit CHARGE	49	Strobe	O			Strobe
15	LIGHT_CTL	O	—	—	Normal	50	Strobe	O			Strobe
16	TALK LED	O	—	—	Normal	51	Strobe	O			Strobe
17	PLL_UNLOCK	I	UNLOCK		LOCK	52	Strobe	O			Strobe
18	PLL_ST	O				53	Strobe	O			Strobe
19	FLS1 (20)	I	Weak electric field		Input Sens.	54	KEY DATA IN	I	Normal		Key IN
20	FLS2 (30)	I	Weak electric field		Input Sens.	55	KEY DATA IN	I	Normal		Key IN
21	RX DATA	I				56	KEY DATA IN	I	Normal		Key IN
22	RX_POW	O	—	Normal	ON	57	KEY DATA IN	I	Normal		Key IN
23	TX_POW	O	—	Normal	ON	58~89	SEG21~52	O			
24	STOPC					90	COM1	O			
25	CHARGE	I	Normal		CHARGE	91	COM2	O			
26	POWER DOWN	I	Normal		P. DOWN	92	COM3	O			
27	POWER SW	O	Normal		ON	93	COM4	O			
28	ID ROM_CLK	O				94			Normal	—	—
29	ID ROM_DIN	O				95					
30	ALARM	O		Normal		96					
31	PLL_TX	O	—	Normal	ON	97	Source		Normal	—	—
32	VOL1	O		—		98					
33	VOL2	O		—		99					
34	ID ROM_CS	O				100			—	—	Normal
35	PLL_CLK	O									

■ CPU TERMINAL EXPLANATION IC6 PQVI4829B99H

Classification	Symbol of pin	Pin No.	I/O	Description
Power source	V_{CC}	97		Apply the source voltage.
	GND	13		Ground this.
Test	$\overline{TEST}$	7	I	Not used for a user application. Connect to V_{CC} electric potential.
Reset	RESET	10	I	Used to reset the MCU.
Oscillation	OSC_1	8	I	I/O terminals for the system clock oscillator. Connect to the ceramic oscillator or external oscillating circuit.
	OSC_2	9	O	
	X1	11	I	I/O terminals for the oscillator used for clock. Connect the crystal oscillator of 32.768 kHz. If not, fix the X1 terminal to V_{CC} and open the X2 terminal.
	X2	12	O	
Port	D_0~D_9	14~23	I/O	I/O terminal used for access every 1 bit. D0~D9 are the large current output terminals that supply each terminal for 15 mA (max.).
	D_{10}, D_{11}	24, 25	I	Input terminals used for access every 1 bit.
	$R0_0$~$R7_3$	26~57	I/O	I/O terminals used for access every 4 bits.
Interrupt	$\overline{INT_0}$, $\overline{INT_1}$, INT_2~INT_4	25~29	I	Input terminal used for external interrupt input.
Stop clear	$\overline{STOPC}$	24	I	Input terminal used for the transition from the stop mode to the active mode.
Serial interface	$\overline{SCK}$	35	I/O	Clock I/O terminal of the serial interface.
	SI	36	I	Received data input terminal of the serial interface.
	SO	37	O	Transmitted data output terminal of the serial interface.
Timer	TOB, TOC, TOD	30~32	O	Timer output terminal.
	EVNB, EVND	33, 34	I	Event count input terminal.
LCD	V_1, V_2, V_3	94~96		Power source terminal for the LCD driver. The built-in power decomposition resistance is normally used in the open status. The voltage condition: $V_{CC} \geq V_1 \geq V_2 \geq V_3 \geq GND$
	COM1~COM4	90~93	O	Common signal terminal for the LCD.
	SEG1~SEG52	38~89	O	Segment signal terminal for the LCD.
A/D converter	AV_{CC}	1		Power source terminal for the A/D converter. Make connection so that this electric potential is equal to that of V_{CC} at the position as close as possible to V_{CC}.
	AV_{SS}	6		GND terminal to AV_{CC}. Make connection so that this electric potential is equal to that of V_{CC} at the position as close as possible to V_{CC}.
	AN_0~AN_3	2~5	I	Analog input terminal of the A/D converter.

FREQUENCY TABLE (MHz)

CH	Base Unit TX Portable Unit RX	Base Unit RX Portable Unit TX	CH	Base Unit TX Portable Unit RX	Base Unit RX Portable Unit TX
1	902.100 MHz	926.100 MHz	31	903.000 MHz	927.000 MHz
2	902.130 MHz	926.130 MHz	32	903.030 MHz	927.030 MHz
3	902.160 MHz	926.160 MHz	33	903.060 MHz	927.060 MHz
4	902.190 MHz	926.190 MHz	34	903.090 MHz	927.090 MHz
5	902.220 MHz	926.220 MHz	35	903.120 MHz	927.120 MHz
6	902.250 MHz	926.250 MHz	36	903.150 MHz	927.150 MHz
7	902.280 MHz	926.280 MHz	37	903.180 MHz	927.180 MHz
8	902.310 MHz	926.310 MHz	38	903.210 MHz	927.210 MHz
9	902.340 MHz	926.340 MHz	39	903.240 MHz	927.240 MHz
10	902.370 MHz	926.370 MHz	40	903.270 MHz	927.270 MHz
11	902.400 MHz	926.400 MHz	41	903.300 MHz	927.300 MHz
12	902.430 MHz	926.430 MHz	42	903.330 MHz	927.330 MHz
13	902.460 MHz	926.460 MHz	43	903.360 MHz	927.360 MHz
14	902.490 MHz	926.490 MHz	44	903.390 MHz	927.390 MHz
15	902.520 MHz	926.520 MHz	45	903.420 MHz	927.420 MHz
16	902.550 MHz	926.550 MHz	46	903.450 MHz	927.450 MHz
17	902.580 MHz	926.580 MHz	47	903.480 MHz	927.480 MHz
18	902.610 MHz	926.610 MHz	48	903.510 MHz	927.510 MHz
19	902.640 MHz	926.640 MHz	49	903.540 MHz	927.540 MHz
20	902.670 MHz	926.670 MHz	50	903.570 MHz	927.570 MHz
21	902.700 MHz	926.700 MHz	51	903.600 MHz	927.600 MHz
22	902.730 MHz	926.730 MHz	52	903.630 MHz	927.630 MHz
23	902.760 MHz	926.760 MHz	53	903.660 MHz	927.660 MHz
24	902.790 MHz	926.790 MHz	54	903.690 MHz	927.690 MHz
25	902.820 MHz	926.820 MHz	55	903.720 MHz	927.720 MHz
26	902.850 MHz	926.850 MHz	56	903.750 MHz	927.750 MHz
27	902.880 MHz	926.880 MHz	57	903.780 MHz	927.780 MHz
28	902.910 MHz	926.910 MHz	58	903.810 MHz	927.810 MHz
29	902.940 MHz	926.940 MHz	59	903.840 MHz	927.840 MHz
30	902.970 MHz	926.970 MHz	60	903.870 MHz	927.870 MHz

SCHEMATIC DIAGR

(RF UN

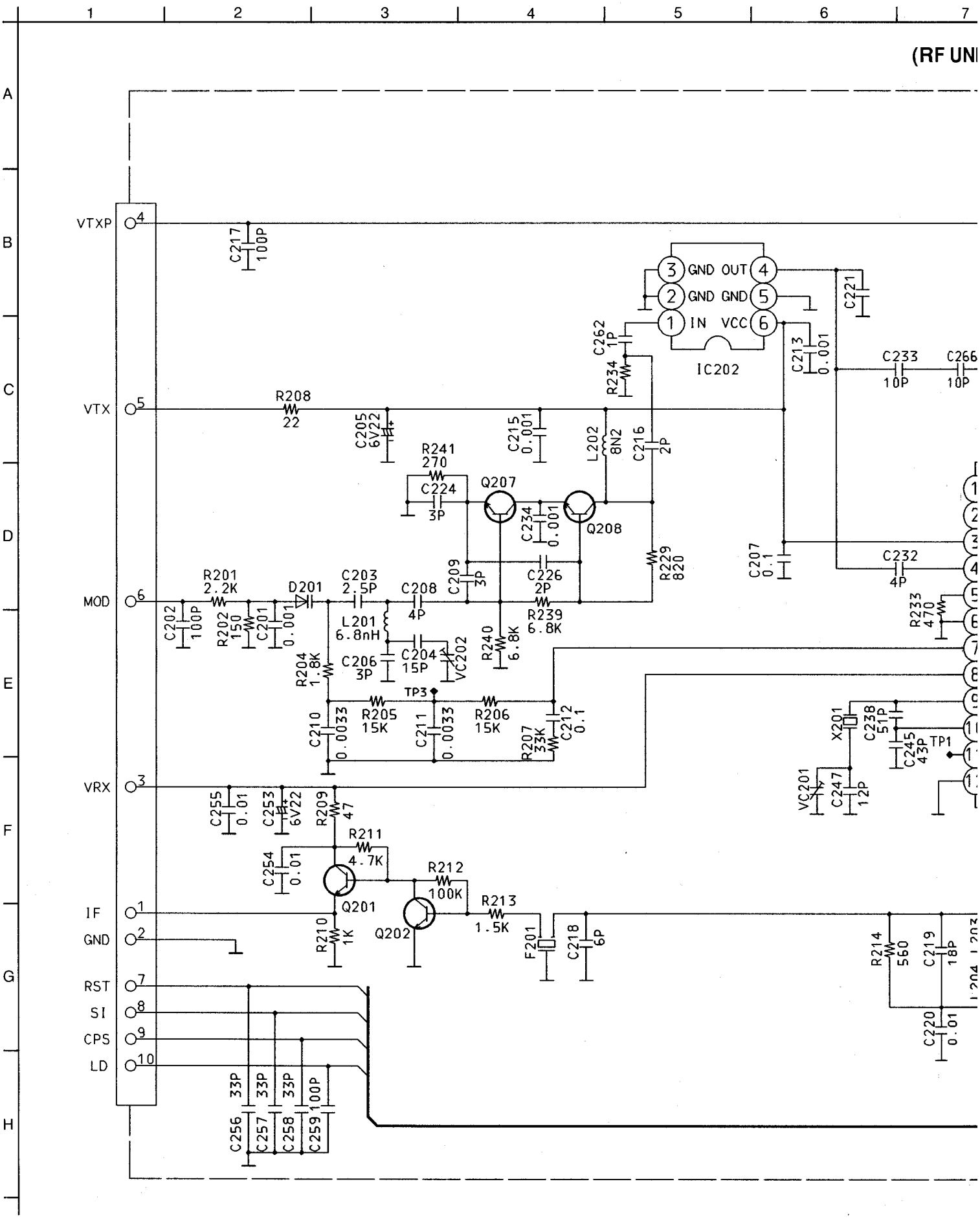

TIC DIAGRAM (KX-T9500H)

(RF UNIT)

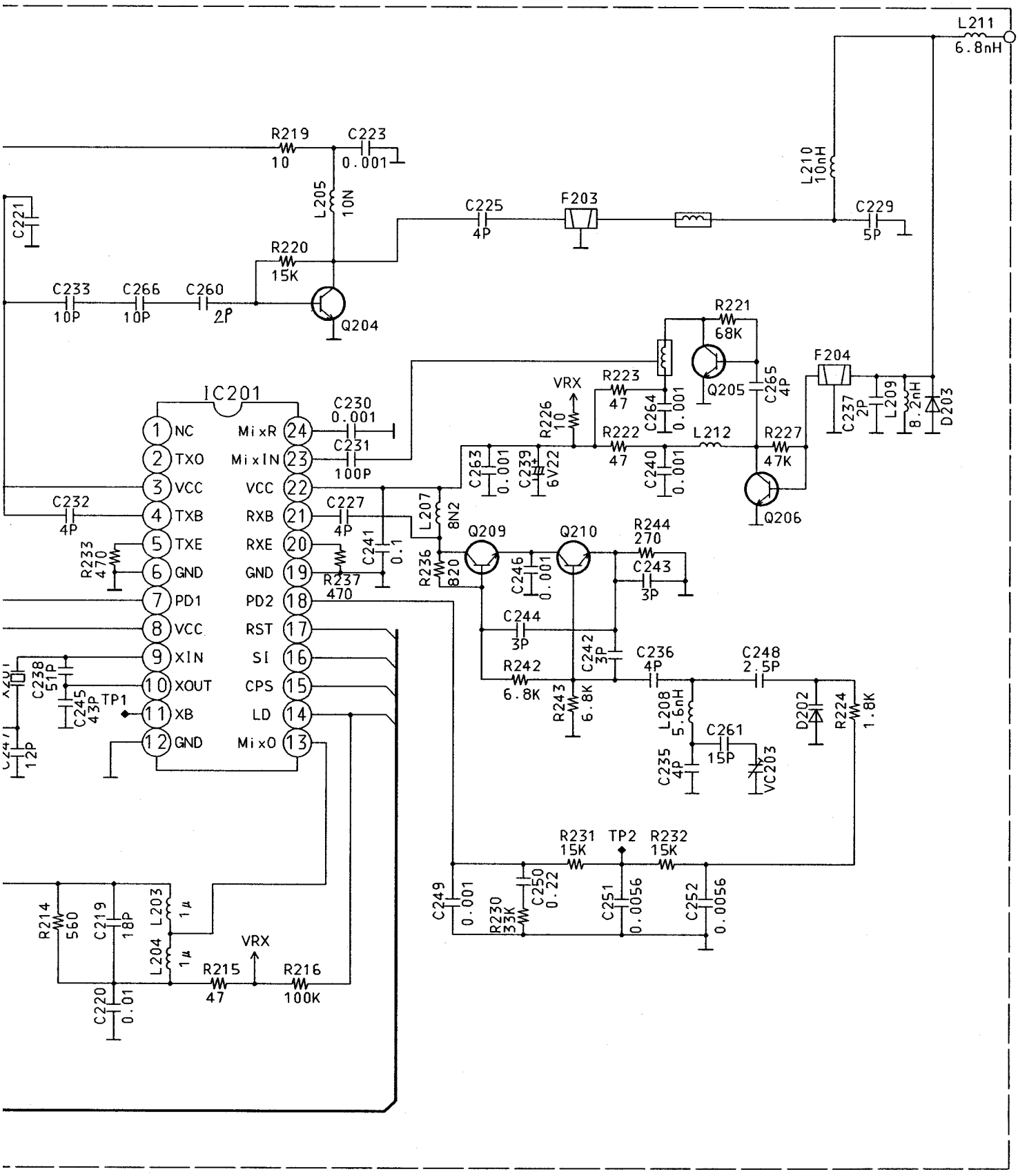

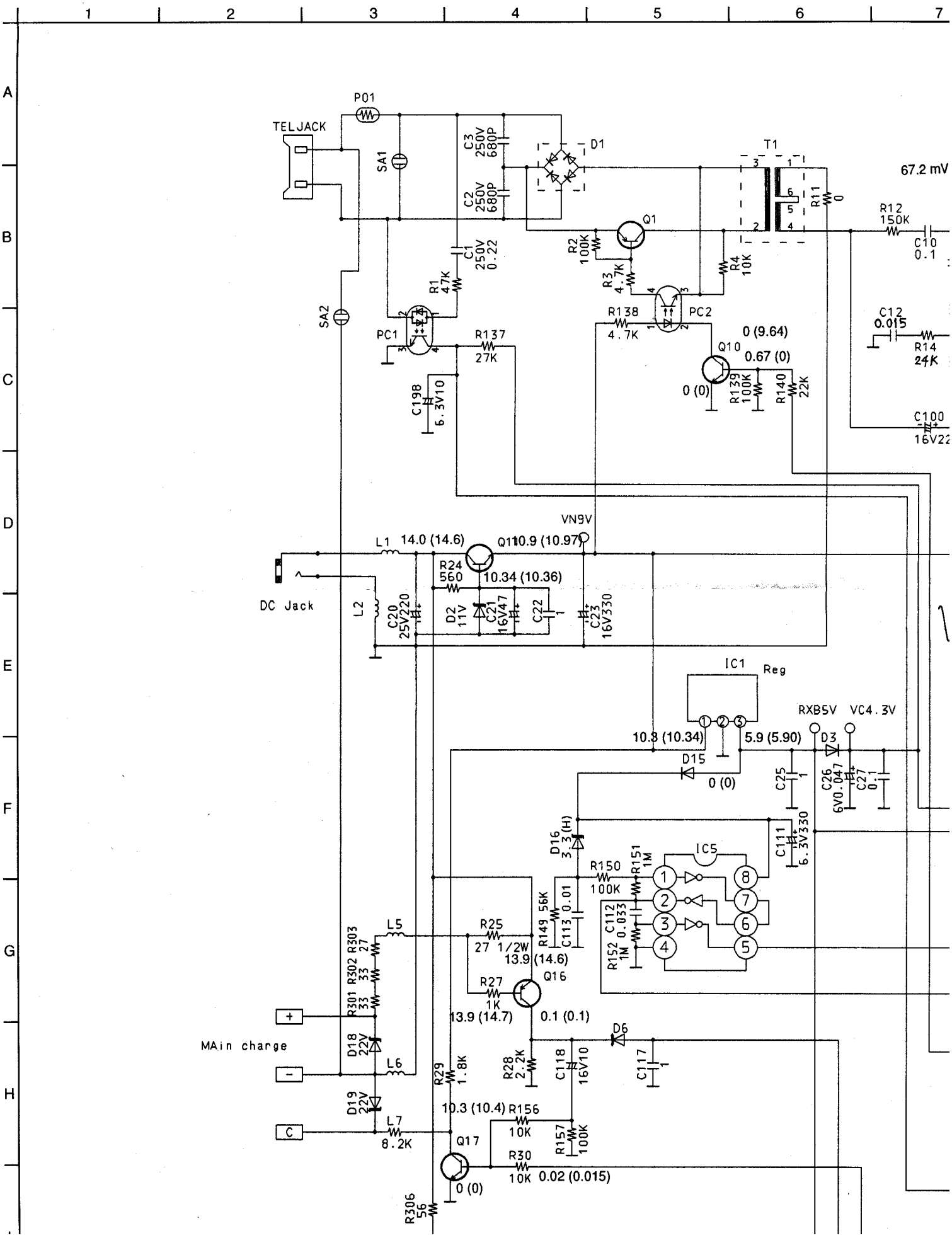
TELJACK
P01
SA1
SA2
C3 250V 680P
C2 250V 680P
D1
T1
67.2 mV
R11 0
R12 150K
C10 0.1
Q1
R2 100K
R3 4.7K
R4 10K
C1 250V 0.22
R1 47K
PC1
PC2
R138 4.7K
R137 27K
0 (9.64)
Q10
0.67 (0)
0 (0)
R139 100K
R140 22K
C12 0.015
R14 24K
C198 6.3V10
C100 16V22
VN9V
L1
14.0 (14.6)
Q11
10.9 (10.97)
R24 560
10.34 (10.36)
DC Jack
L2
C20 25V220
D2 11V
C21 16V47
C22 1
C23 16V330
IC1
Reg
RXB5V
VC4.3V
10.8 (10.34)
5.9 (5.90)
D3
D15
0 (0)
C25 1
C26 6V0.047
C27 0.1
D16 3.3(H)
IC5
C111 6.3V330
R150 100K
R151 1M
R149 56K
C113 0.01
C112 0.033
R152 1M
L5
R25 27 1/2W
13.9 (14.6)
Q16
R27 1K
13.9 (14.7)
0.1 (0.1)
R303 27
R302 33
R301 33
D18 22V
MAin charge
L6
D19 22V
L7 8.2K
R29 1.8K
R28 2.2K
C118 16V10
D6
C117 1
10.3 (10.4)
R156 10K
R157 100K
Q17
R30 10K
0.02 (0.015)
0 (0)
R306 56

SCHEMATIC DIAGRAM (KX-T9500H)

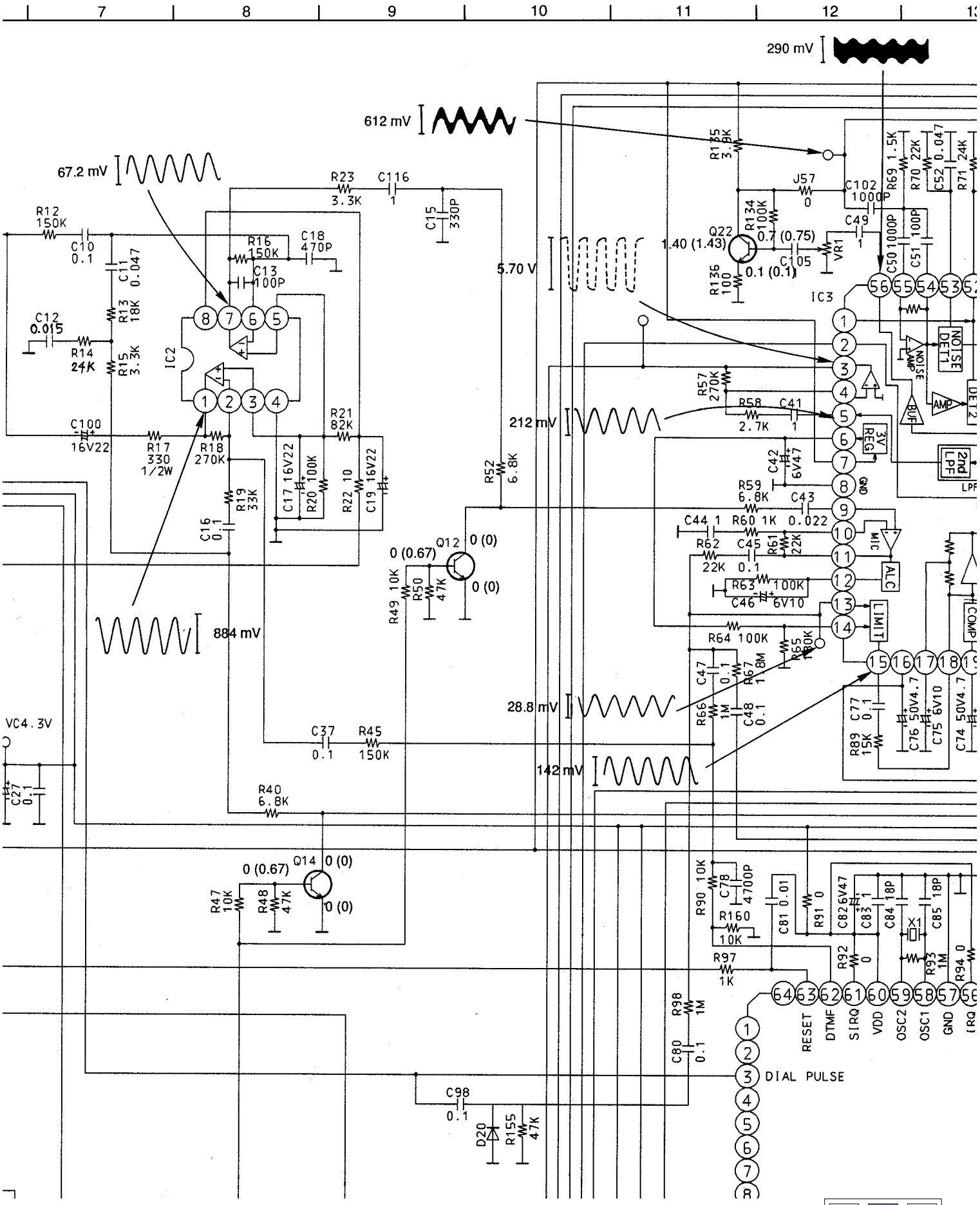

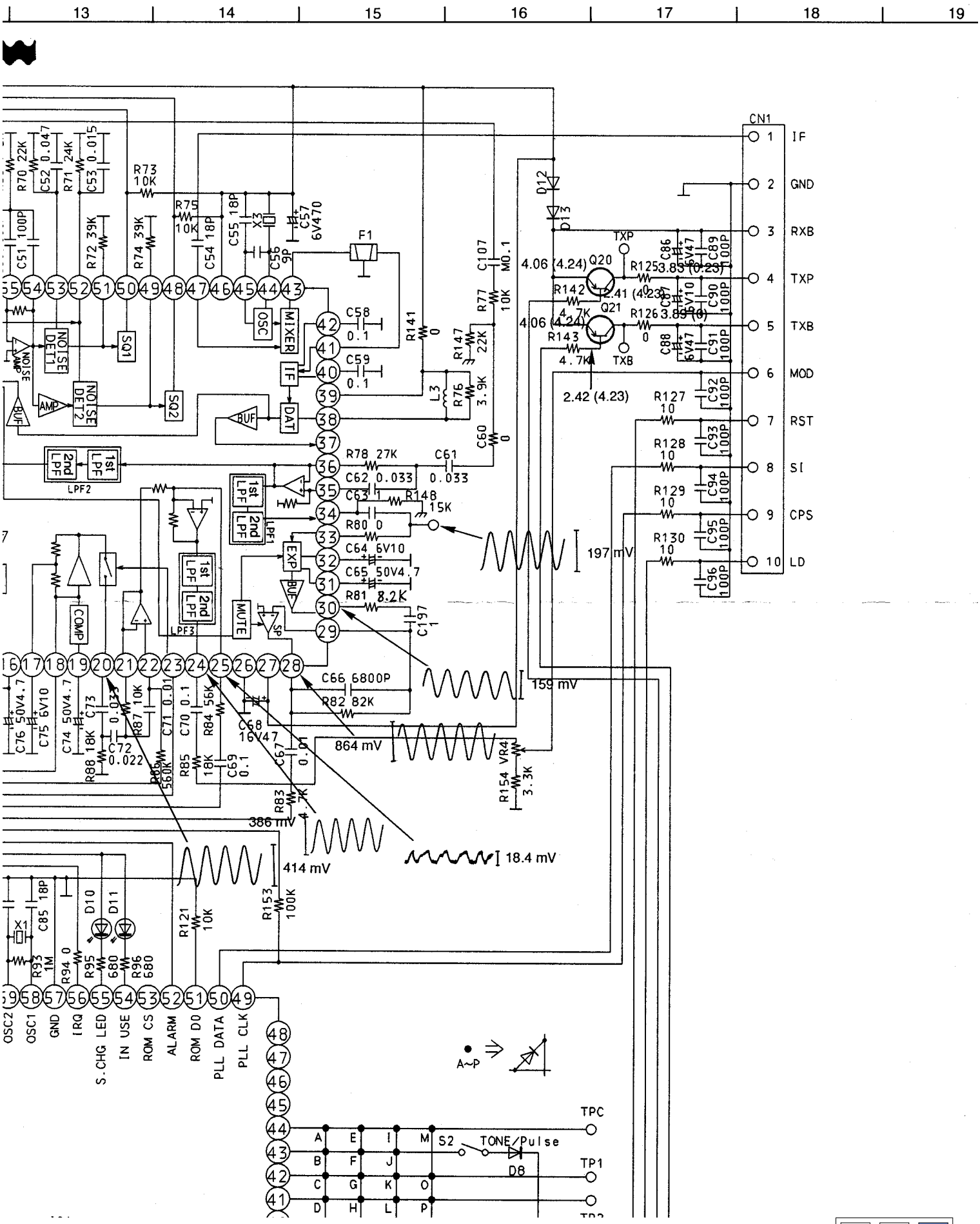
13
14
15
16
17
18
19
CN1
IF
GND
RXB
TXP
TXB
MOD
RST
SI
CPS
LD
TXP
TXB
4.06 (4.24)
2.41 (4.23)
3.85 (0.23)
3.89 (0)
2.42 (4.23)
197 mV
159 mV
864 mV
386 mV
414 mV
18.4 mV
F1
X3
X1
OSC
MIXER
IF
DAT
BUF
AMP
NOISE DET1
NOISE DET2
SQ1
SQ2
LPF2
LPF3
1st LPF
2nd LPF
COMP
MULTE
EXP
DIR
OSC2
OSC1
GND
IRQ
S.CHG LED
IN USE
ROM CS
ALARM
ROM D0
PLL DATA
PLL CLK
A~P
TPC
TP1
S2
TONE/Pulse
D8
D10
D11
D12
D13
Q20
Q21
VR4

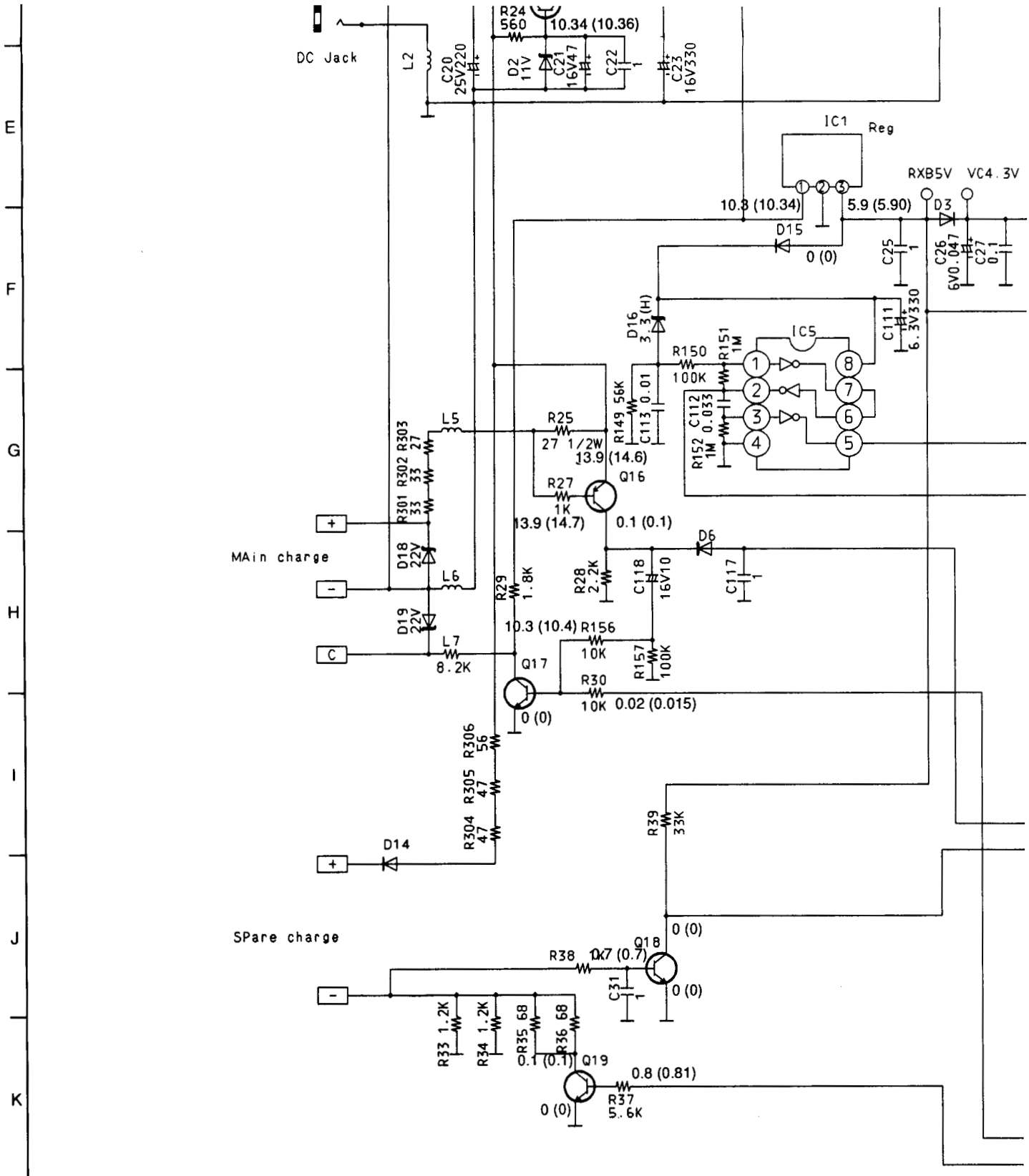

IC3															
Pin / Mode	1	2	3	4	5	6	7	8	9	10	11	12	13	14	15
Talk	5.78	5.17	2.90	2.89	1.67	2.96	5.90	0	1.40	1.40	1.40	0.1	1.39	1.87	1.39
Stand-by	5.78	0	2.90	2.89	1.67	2.96	5.90	0	1.40	1.40	1.40	0.1	1.39	1.87	1.40

Notes: 1. S1: PAGE Switch
2. S2: DIALING MODE Selector
3. DC voltage measurements are taken with an electronic voltmeter from the negative voltage line.
Mic input: –50 dBm/1 kHz
Mode: Talk (Standby)

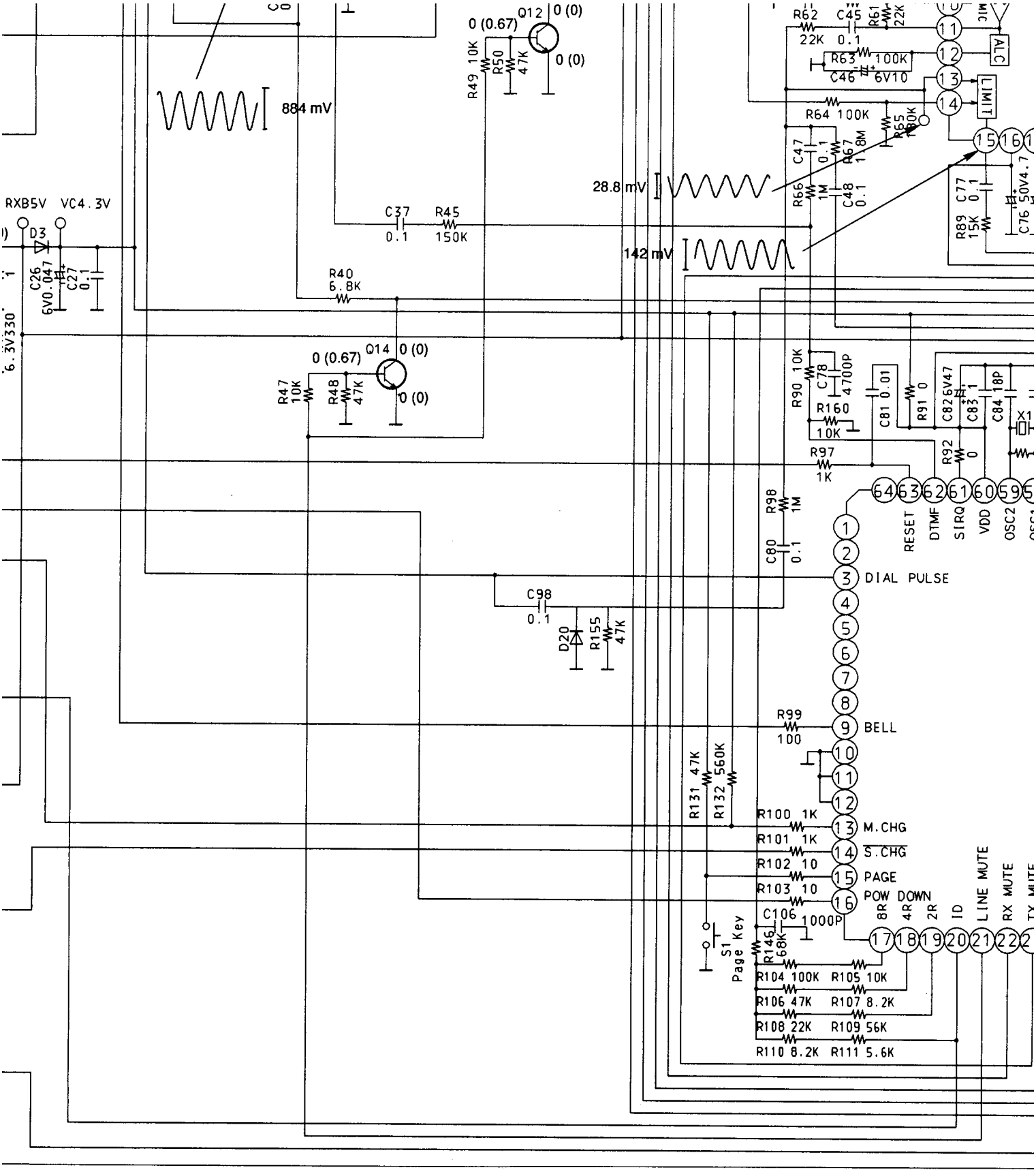

13	14	15	16	17	18	19	20	21	22	23	24	25	26	27	28	29	30	31	32	33	34	35	36	37	38	39	40
1.39	1.87	1.39	1.40	1.40	1.40	0.92	1.4	1.42	1.35	0	1.38	1.40	0	5.88	2.92	2.88	1.40	0.63	1.40	1.40	1.65	1.60	1.64	0.65	5.88	5.87	4.89
1.39	1.87	1.40	1.40	1.40	1.40	0.68	0.2	1.42	1.35	5.18	1.38	1.40	0	5.88	2.97	2.95	1.39	1.70	1.40	1.40	1.65	1.60	1.64	0.60	5.87	5.88	4.91

are taken
from the

This schematic diagram may be modified at any time with development of new technology.

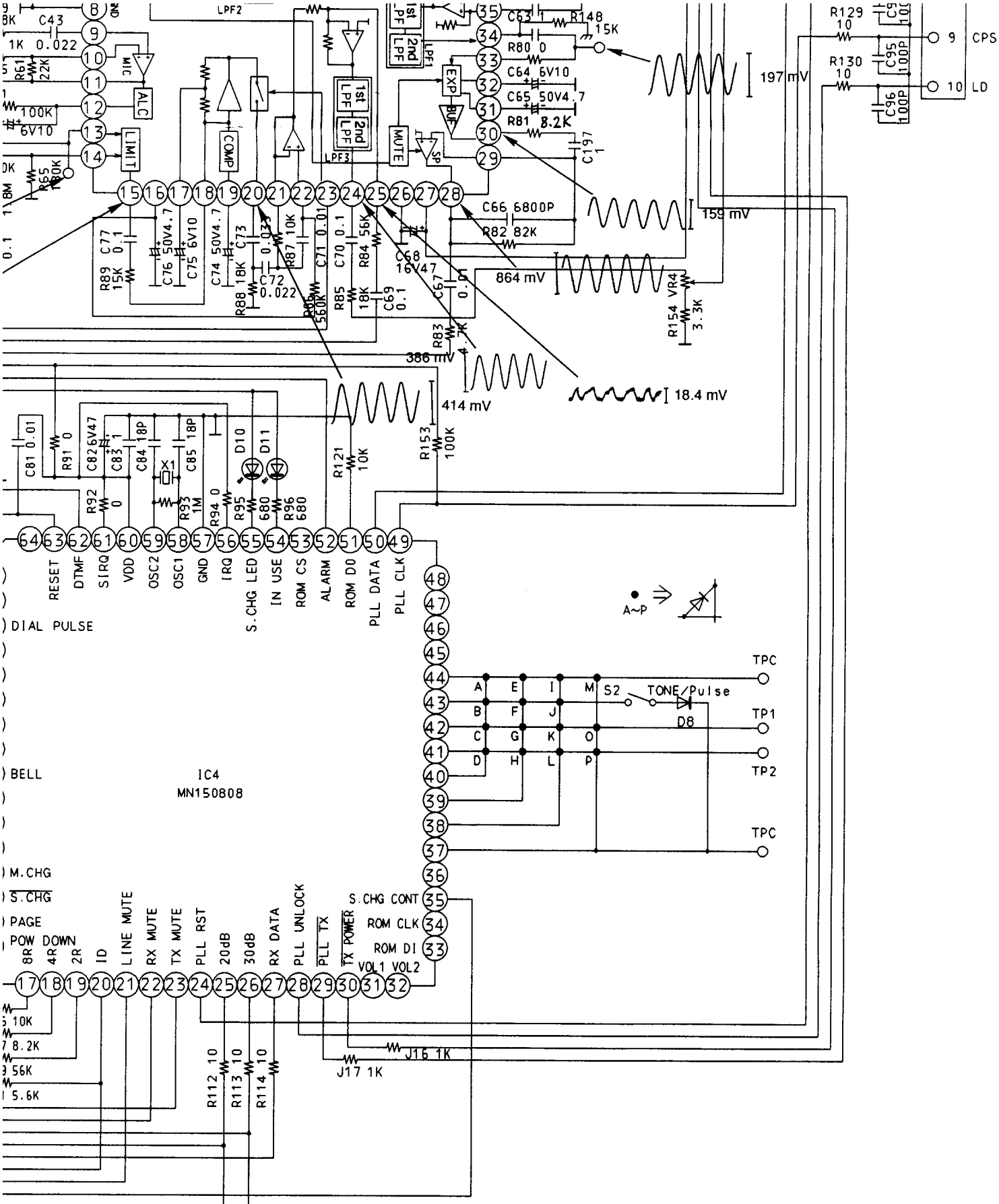

36	37	38	39	40	41	42	43	44	45	46	47	48	49	50	51	52	53	54	55	56
1.64	0.65	5.88	5.87	4.89	4.89	4.89	5.52	5.70	5.25	5.87	1.24	0.21	1.35	0.1	1.35	0.12	0.49	1.84	1.86	0.73
1.64	0.60	5.87	5.88	4.91	4.92	4.92	5.52	5.72	5.27	5.90	1.24	5.70	1.35	5.72	1.35	1.24	1.22	1.80	1.86	0.65

ay be modified
ent of new

IC1																	
Pin / Mode	1	2	3	4	5	6	7	8	9	10	11	12	13	14	15	16	17
Talk	2.9	2.6	1.4	1.4	1.6	2.8	2.9	0	1.3	1.3	1.3	0.1	1.3	1.9	1.3	1.3	1.4
Stand-by	2.9	2.9	1.4	1.4	1.5	0	0	0	0	0	0	0	0	0	0	0	0.3

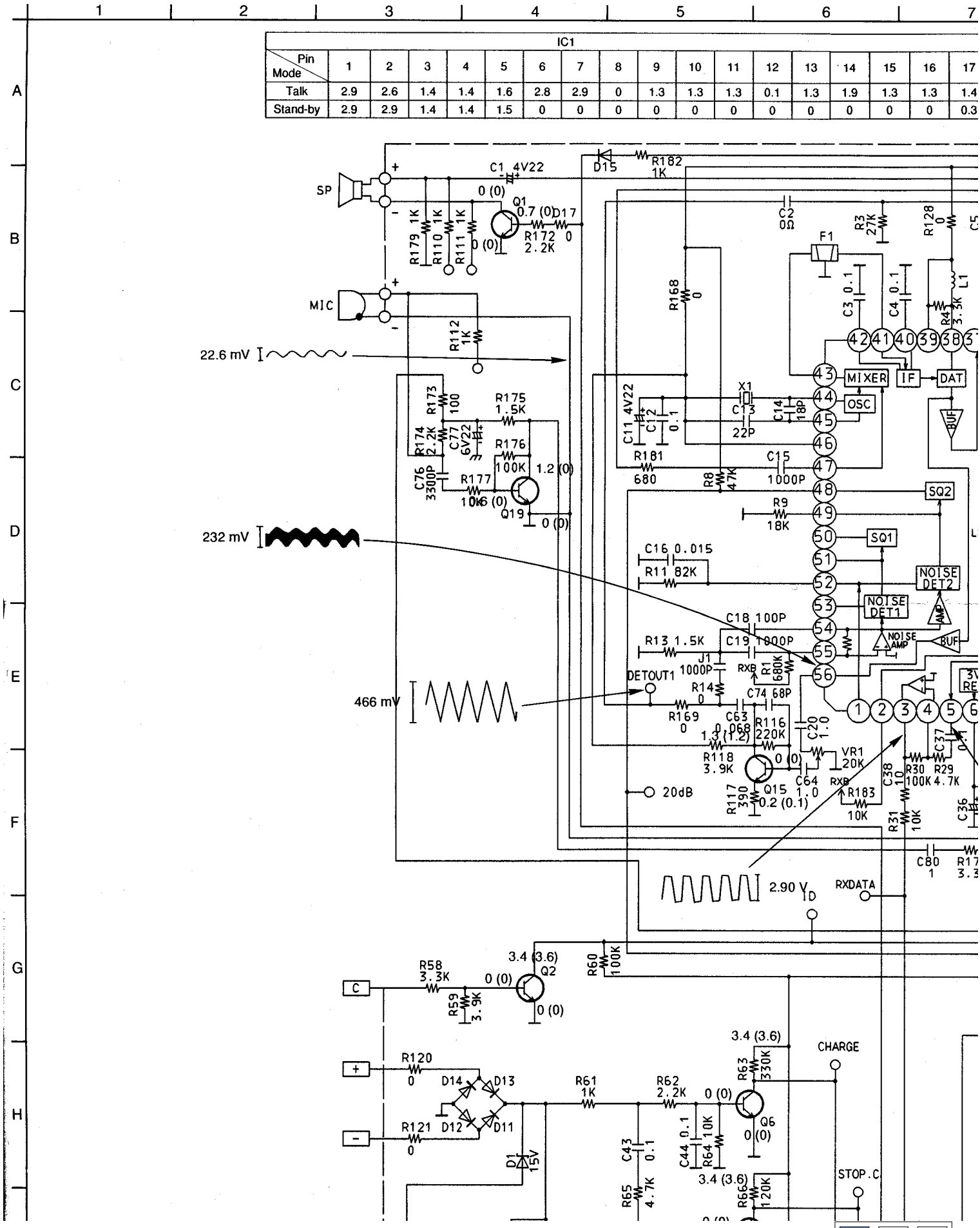

SCHEMATIC DIAGRAM (KX-T9500R)

15	16	17	18	19	20	21	22	23	24	25	26	27	28	29	30	31	32	33	34	35	36	37	38	39
1.3	1.3	1.4	1.3	0.8	1.3	1.4	1.3	0	1.3	1.3	0	3.7	1.5	1.4	1.3	0.8	1.30	1.3	1.5	1.5	1.5	0.5	3.0	3.0
0	0	0.3	0.3	0.3	0	0	0	3.6	0	0	0	0.4	0	0	0	0	0	0	0	0	1.54	0.5	3.0	3.0

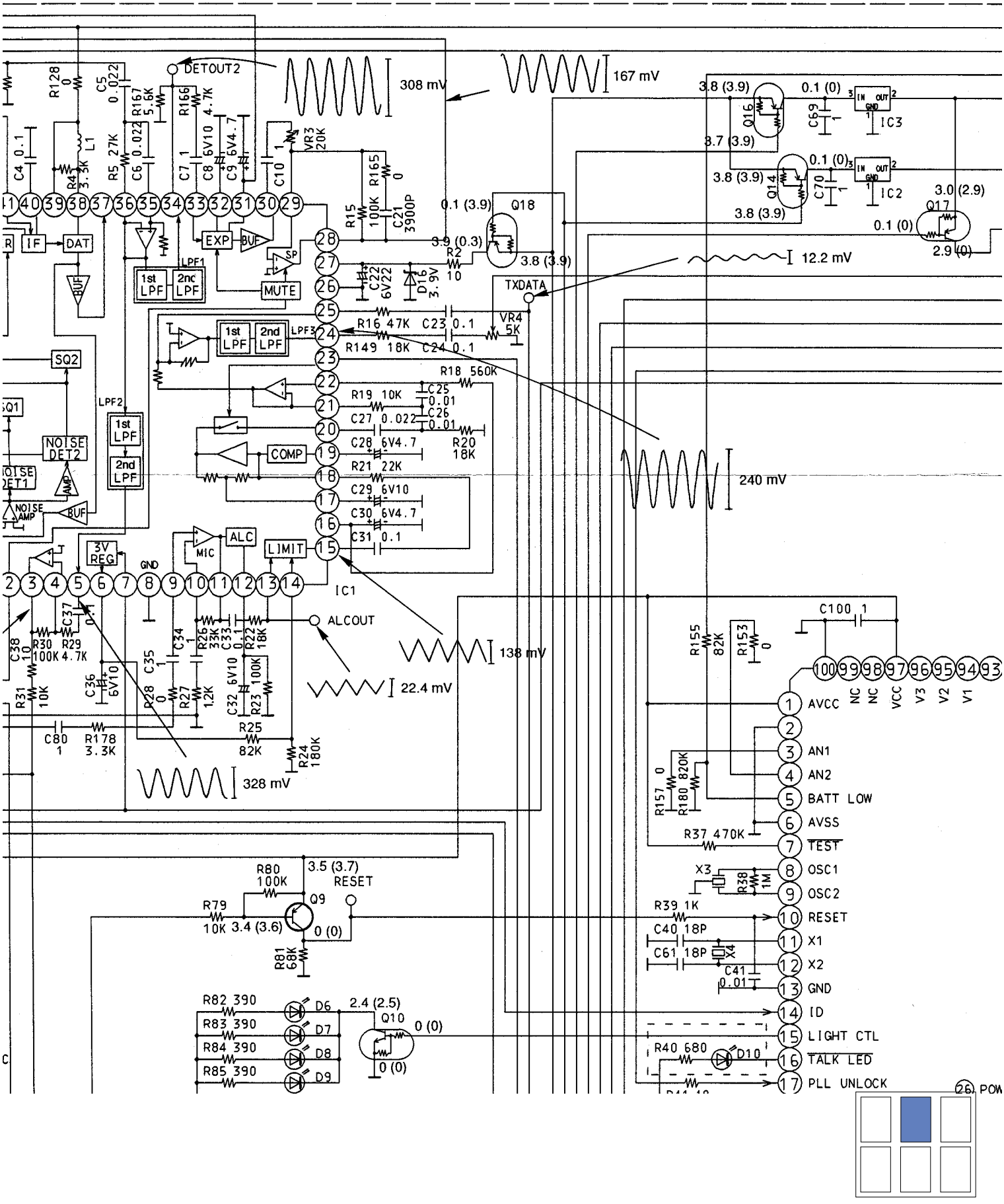

13	14	15	16	17	18	19

38	39	40	41	42	43	44	45	46	47	48	49	50	51	52	53	54	55	56
3.0	3.0	2.0	2.0	2.0	2.7	2.8	2.4	3.0	1.2	0	1.3	3.0	1.3	0	0.7	1.2	1.8	0
3.0	3.0	2.0	2.0	2.0	2.7	2.8	2.4	3.0	1.2	3.0	1.3	3.0	1.3	1.2	0.8	1.2	1.8	0

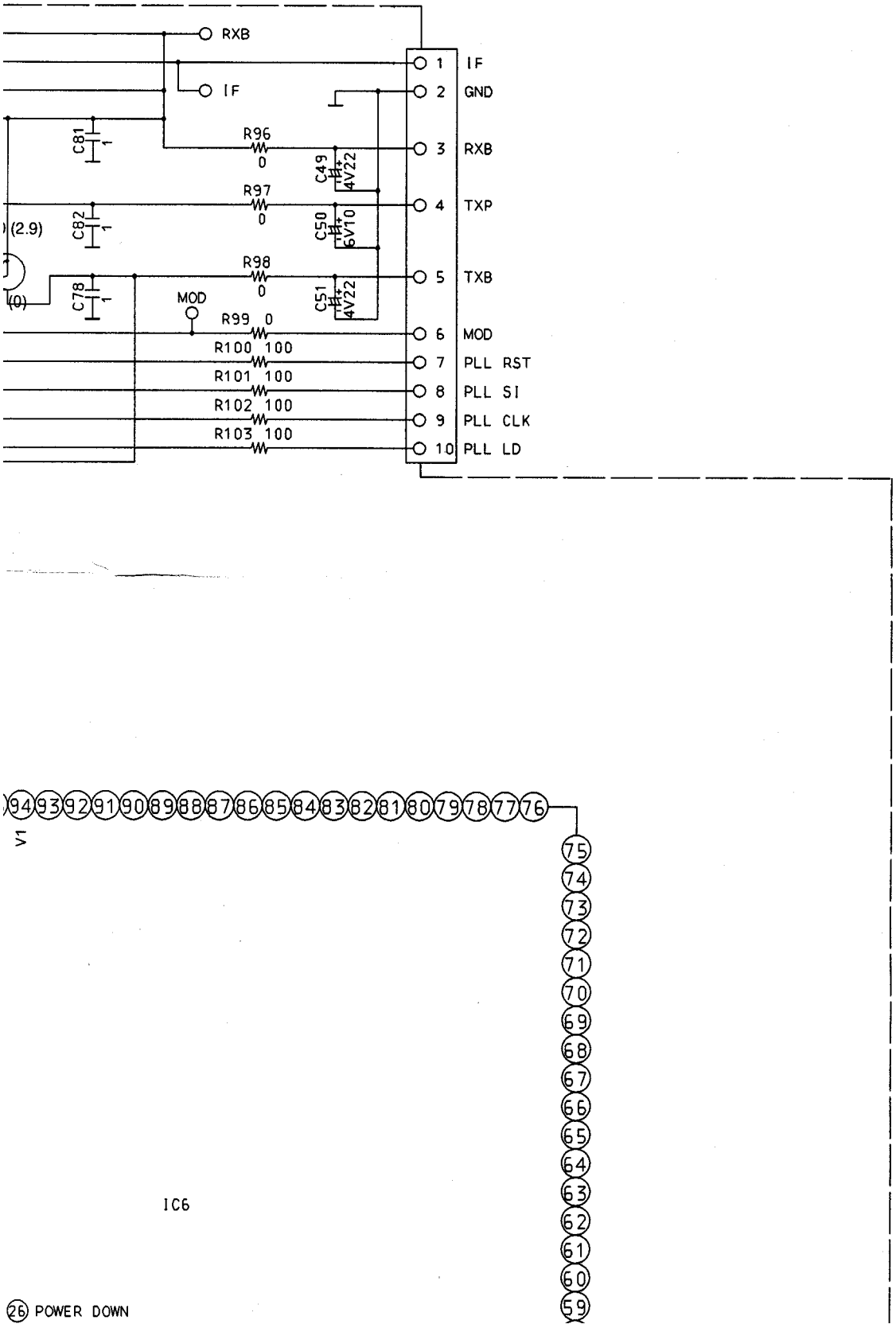

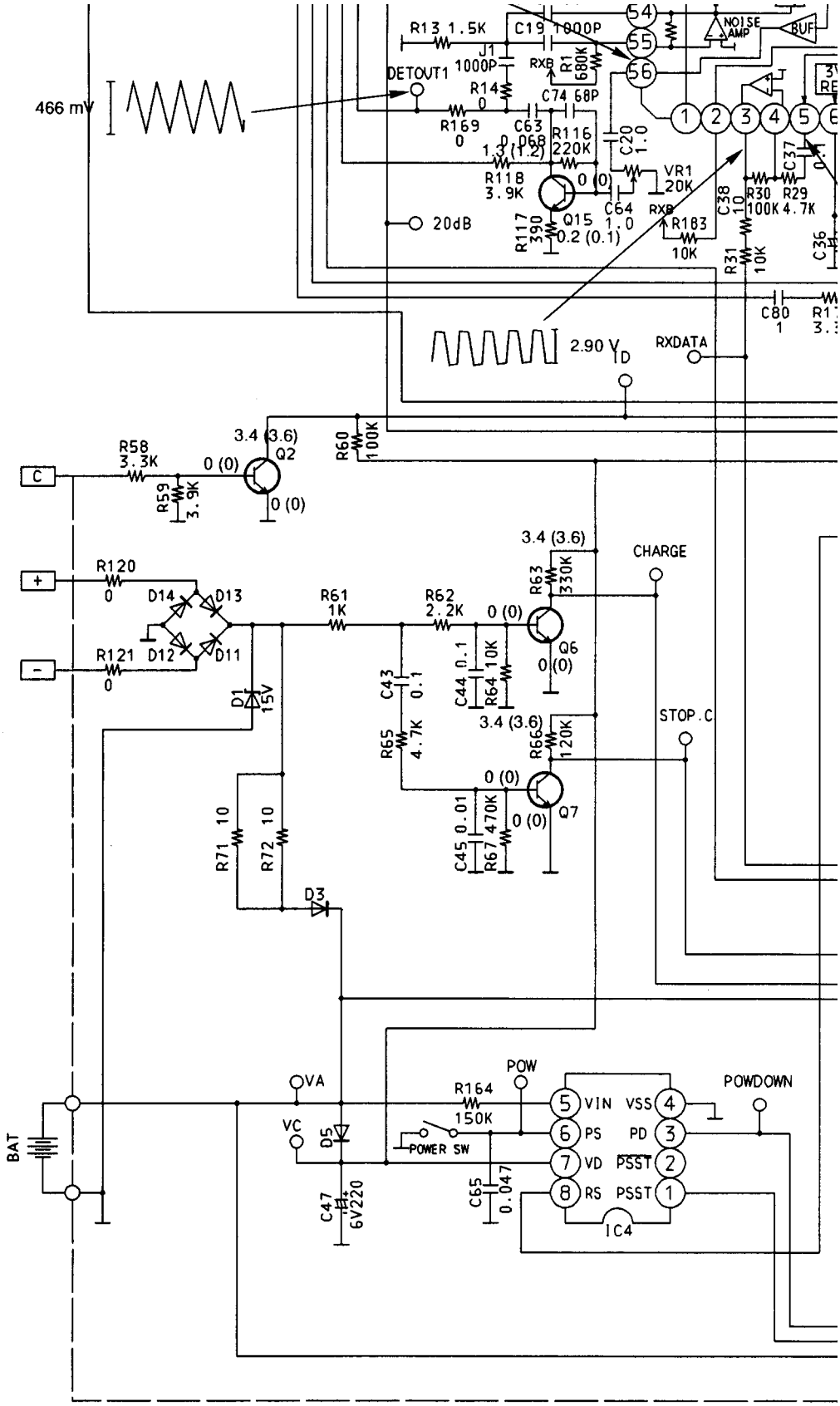

Notes: 1. S1: POWER/RINGER Switch
2. DC voltage measurements are taken with an electronic voltmeter from the negative voltage line.
Mic input: –50 dBm/1 kHz
Mode: Talk (Standby)

Important Safety Notice

The shaded area on this schematic diagra incorporates special features important for protection from fire and electrical shock ha When servicing, it is essential that only manufacturer's specified parts be used for critical components in the shaded areas of schematic.

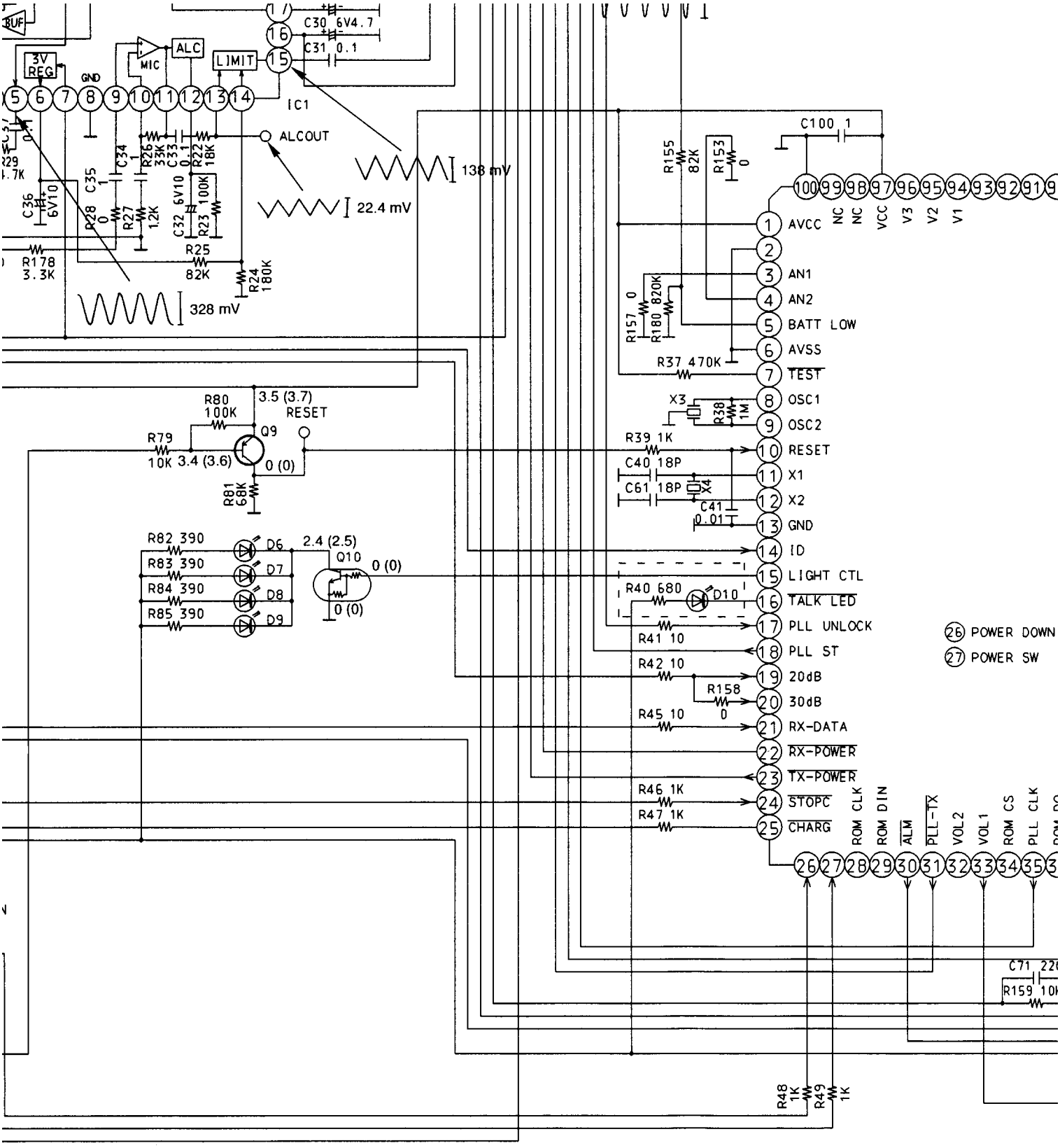

This schematic diagram may be modified at any time with development of new technology.

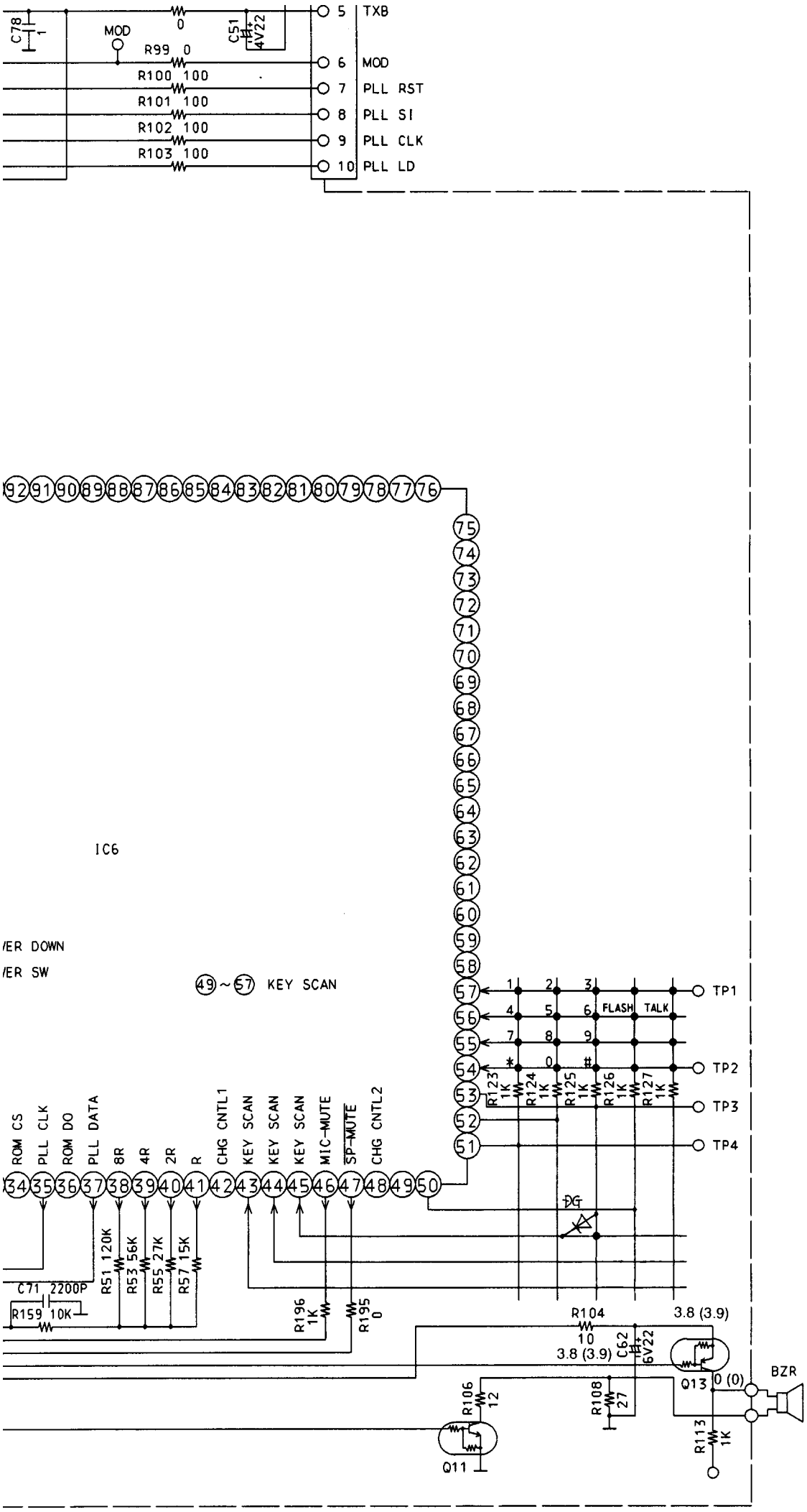
C78 1
MOD
0
C51 4V22
R99 0
R100 100
R101 100
R102 100
R103 100
5 TXB
6 MOD
7 PLL RST
8 PLL SI
9 PLL CLK
10 PLL LD
IC6
/ER DOWN
/ER SW
49 ~ 57 KEY SCAN
TP1
TP2
TP3
TP4
FLASH
TALK
R123 1K
R124 1K
R125 1K
R126 1K
R127 1K
ROM CS
PLL CLK
ROM DO
PLL DATA
8R
4R
2R
R
CHG CNTL1
KEY SCAN
KEY SCAN
KEY SCAN
MIC-MUTE
SP-MUTE
CHG CNTL2
R51 120K
R53 56K
R55 27K
R57 15K
C71 2200P
R159 10K
R196 1K
R195 0
R104 10
3.8 (3.9)
3.8 (3.9)
C62 6V22
Q13
0 (0)
BZR
R106 12
R108 27
R113 1K
Q11

SCHEMATIC DIAGRAM

(RF UNIT)

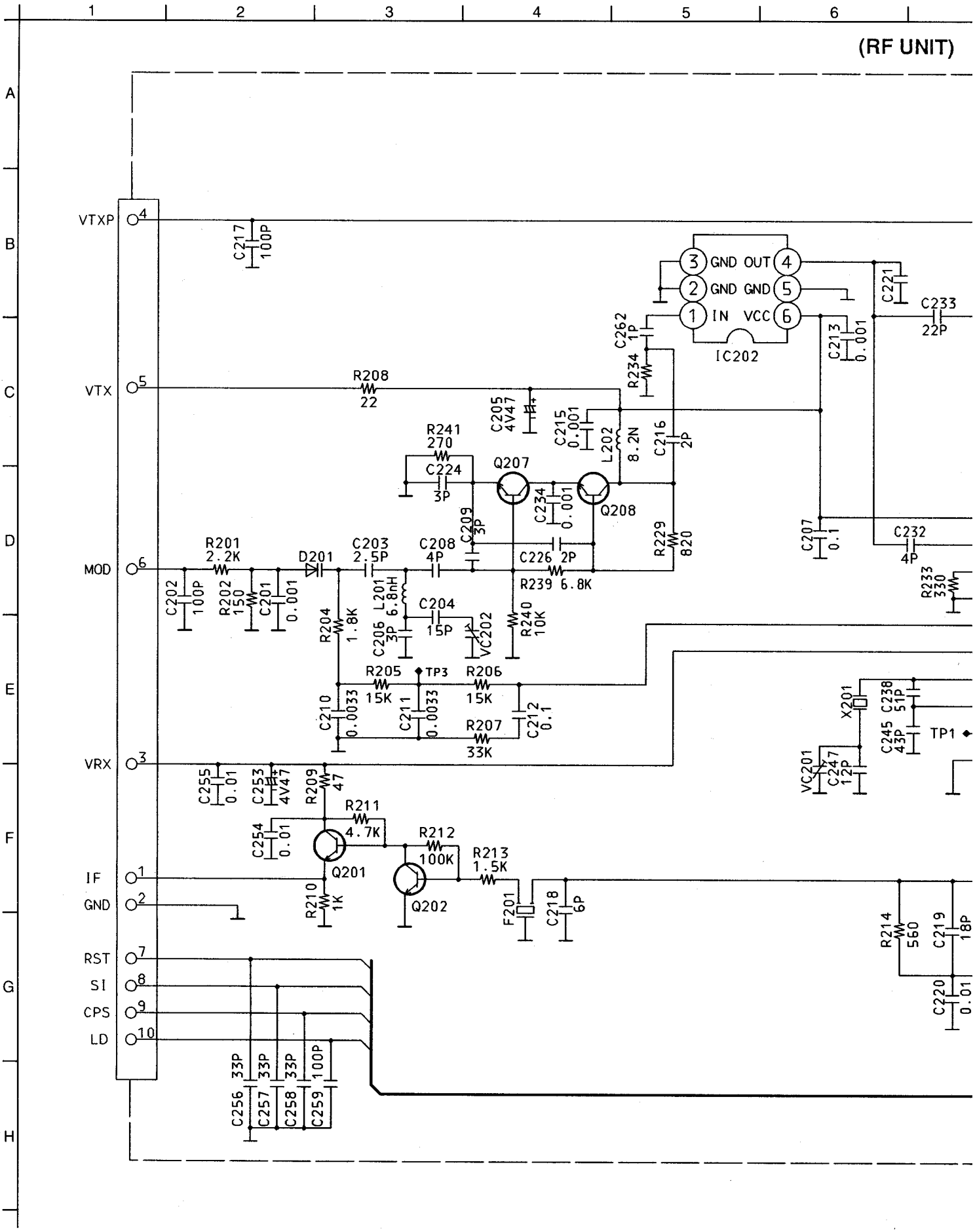

GRAM (KX-T9500R)

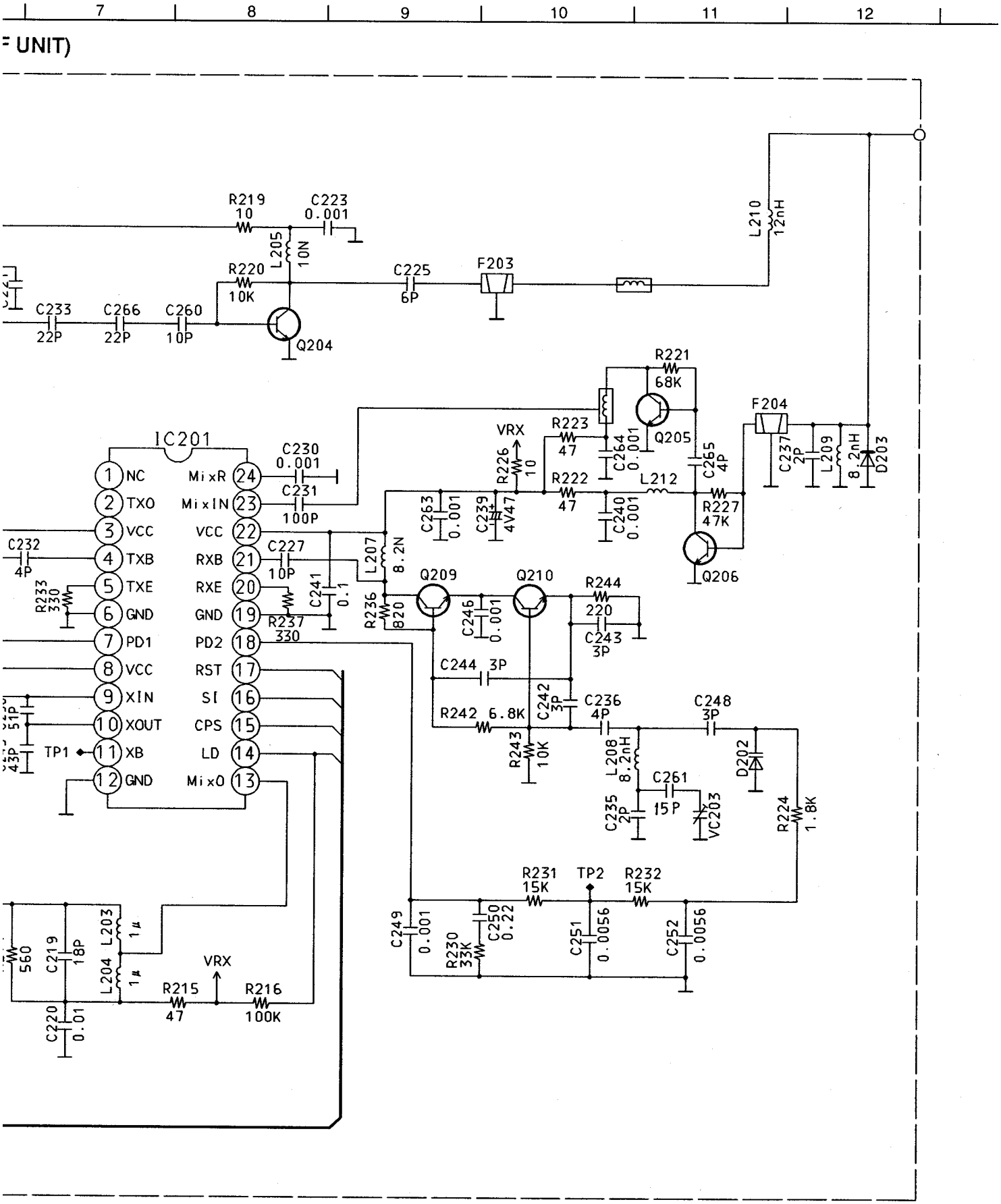

BLOCK DIAGRAM (KX-T9500H)

(Main P.C. Board)

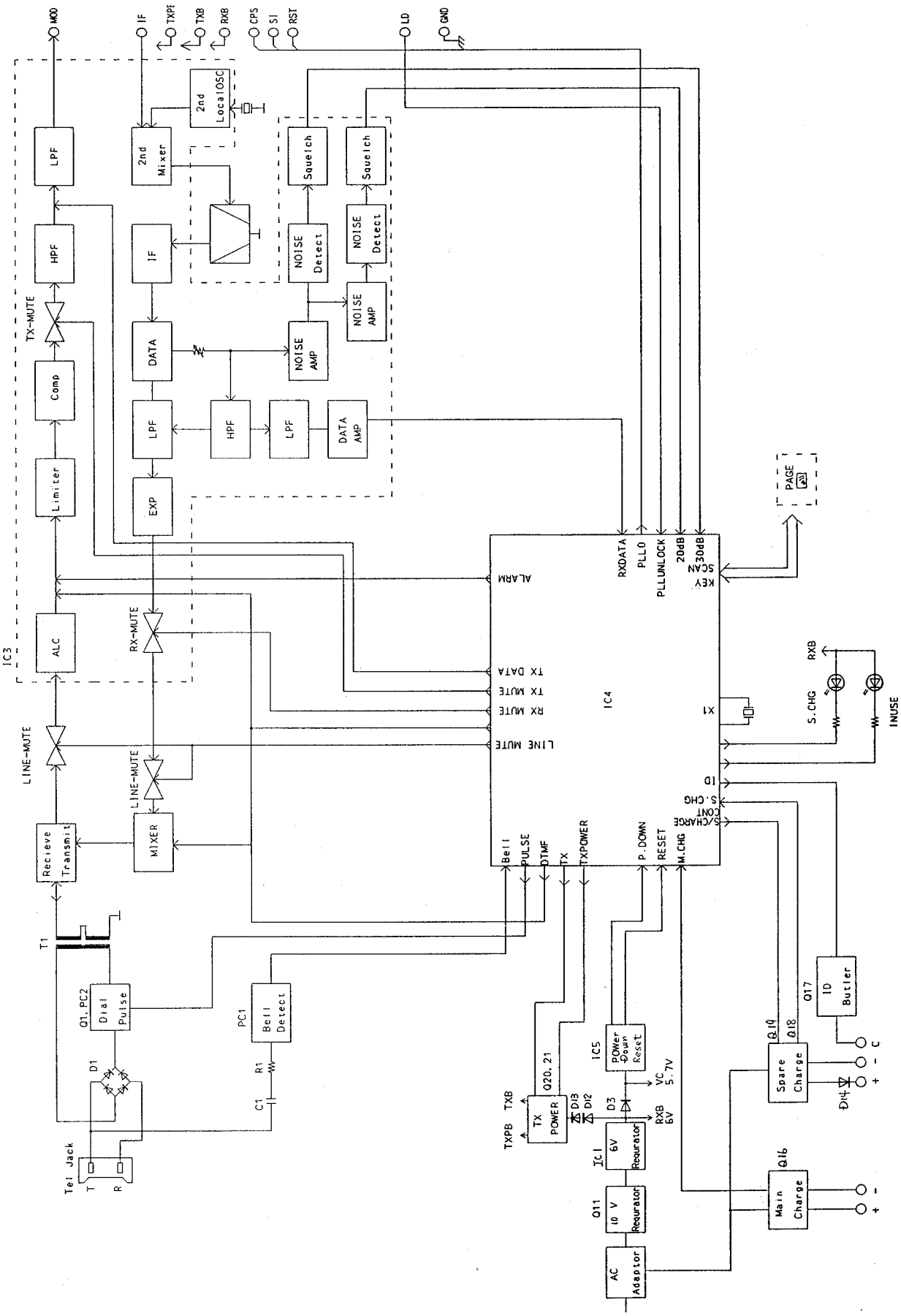

Fig. 27

Fig. 27

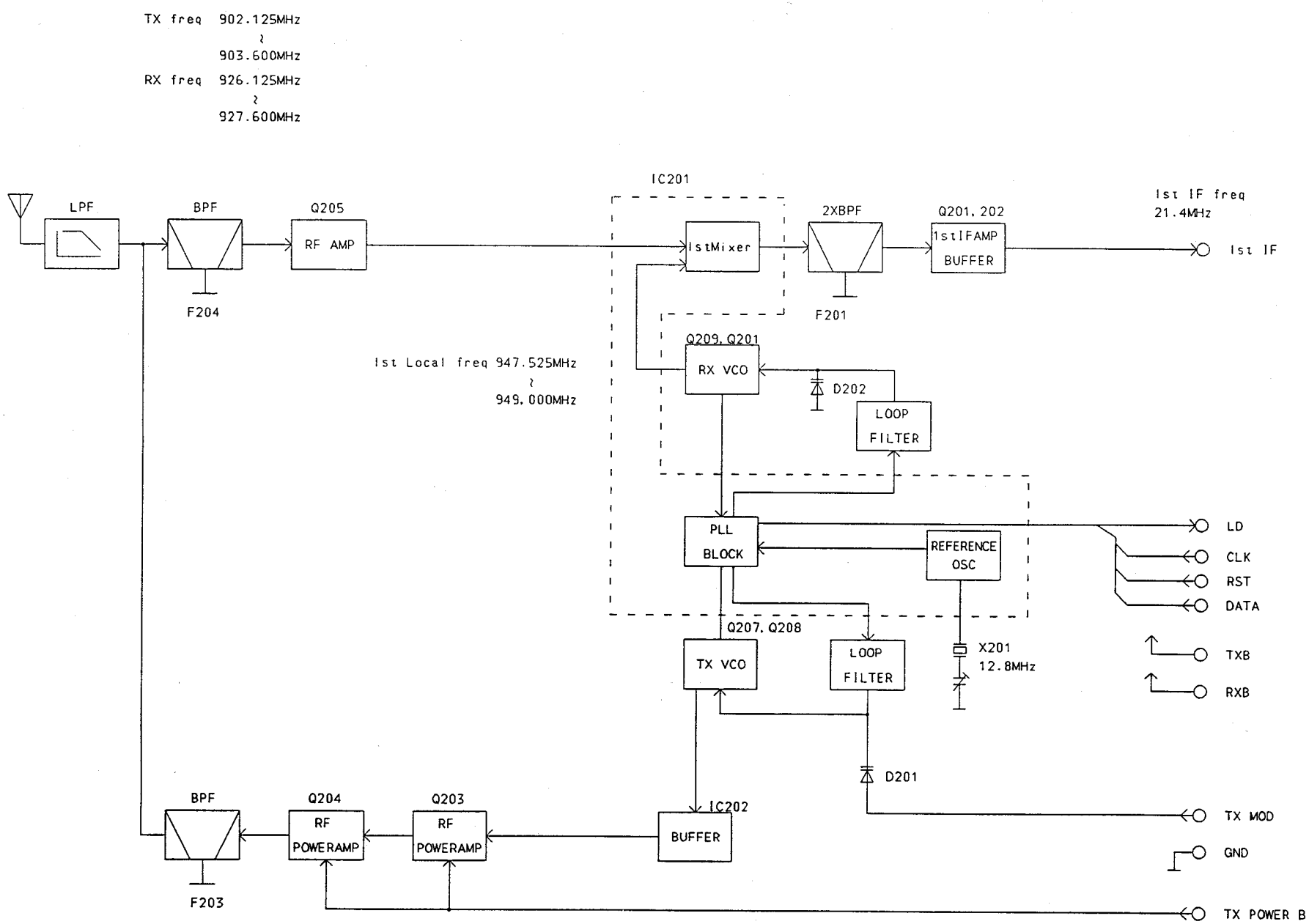

Fig. 28

(RF Unit)

BLOCK DIAGRAM (KX-T9500R)
(Main P.C. Board)

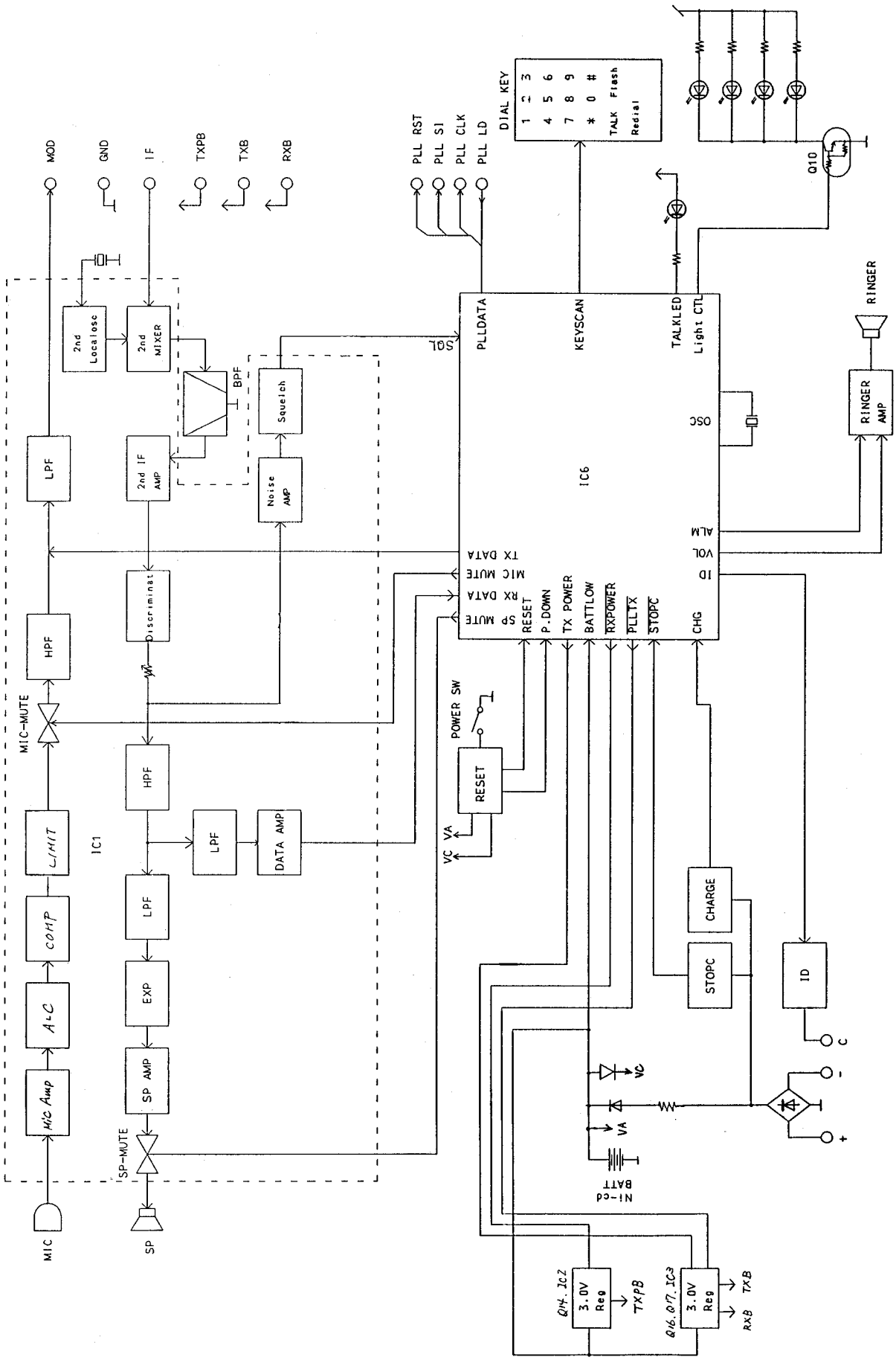

Fig. 29

Fig. 29

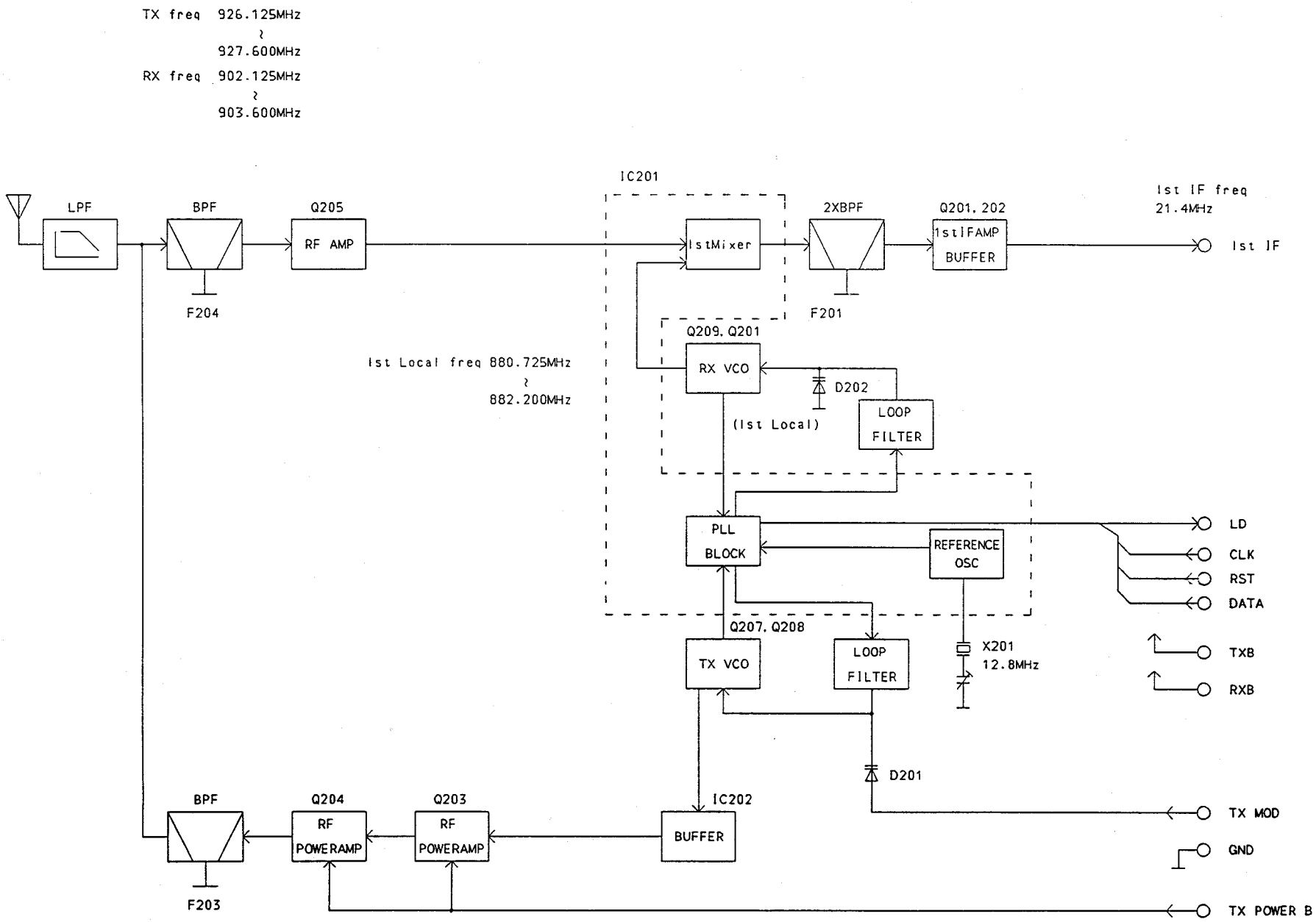

(RF Unit)

Fig. 30

CABINET AND ELECTRICAL PARTS LOCATION (KX-T9500H)

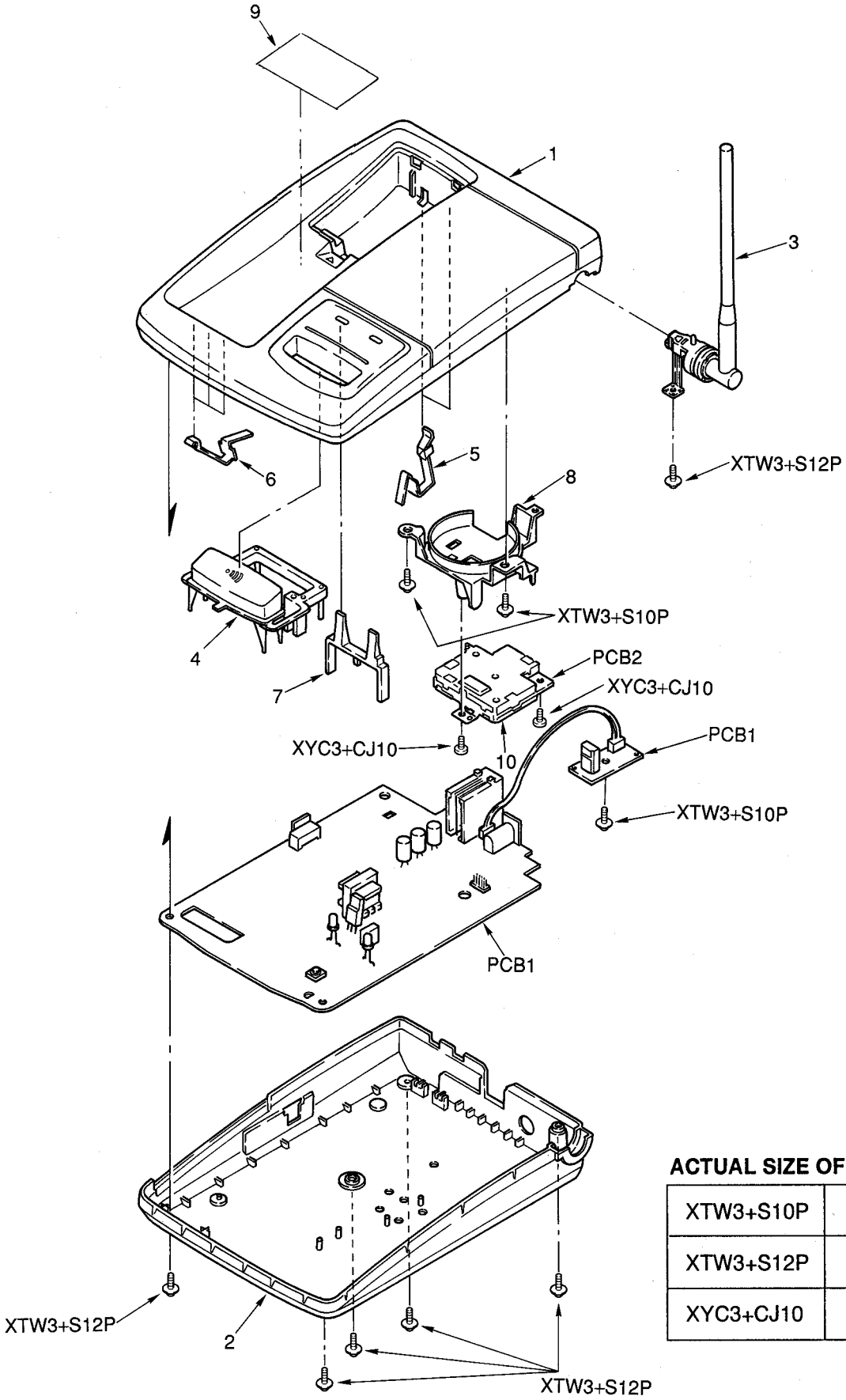

ACTUAL SIZE OF SCREWS

XTW3+S10P	
XTW3+S12P	
XYC3+CJ10	

Fig. 31

CABINET AND ELECTRICAL PARTS LOCATION (KX-T9500R)

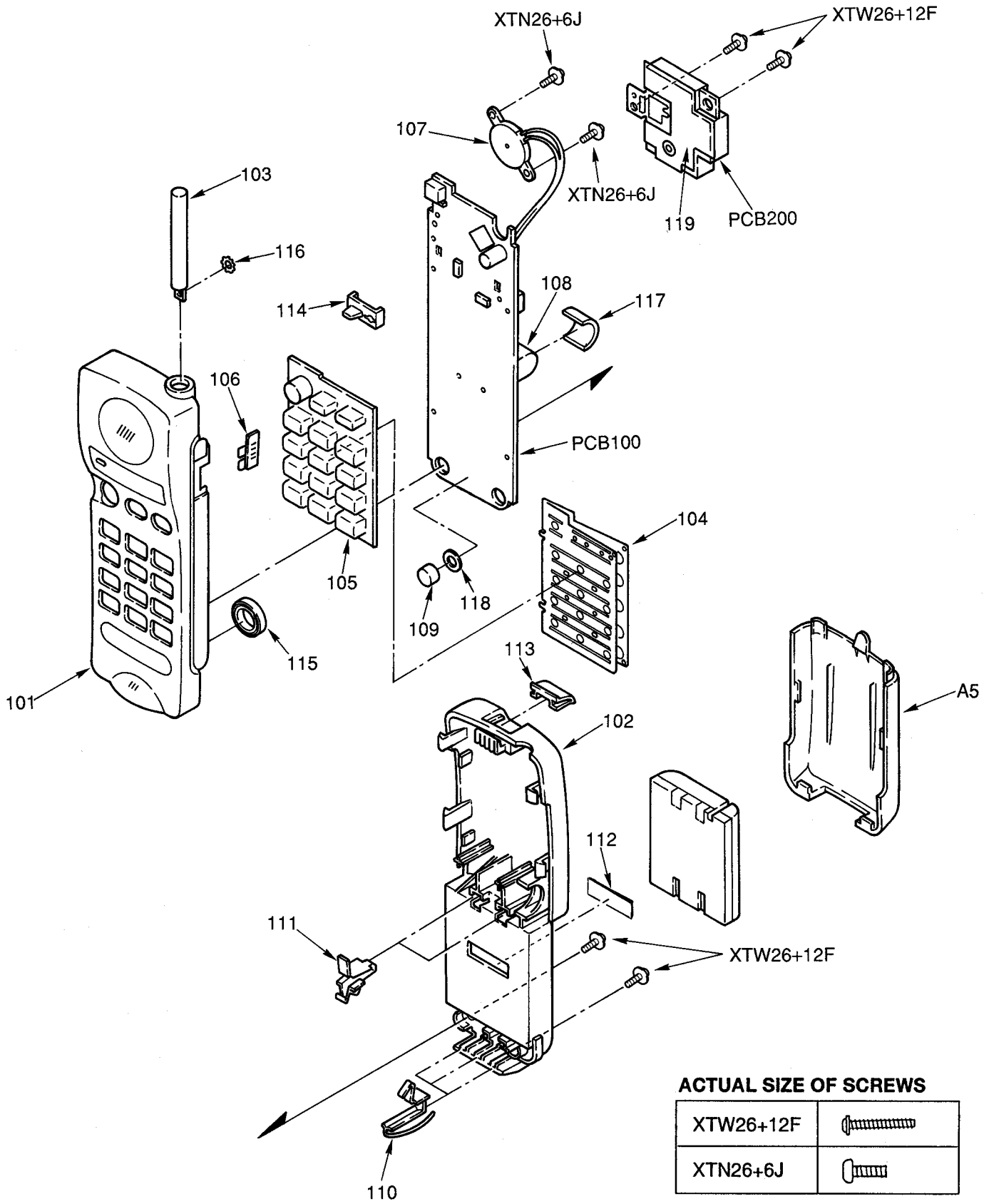

ACTUAL SIZE OF SCREWS

XTW26+12F	
XTN26+6J	

Fig. 32

ACCESSORIES AND PACKING MATERIALS

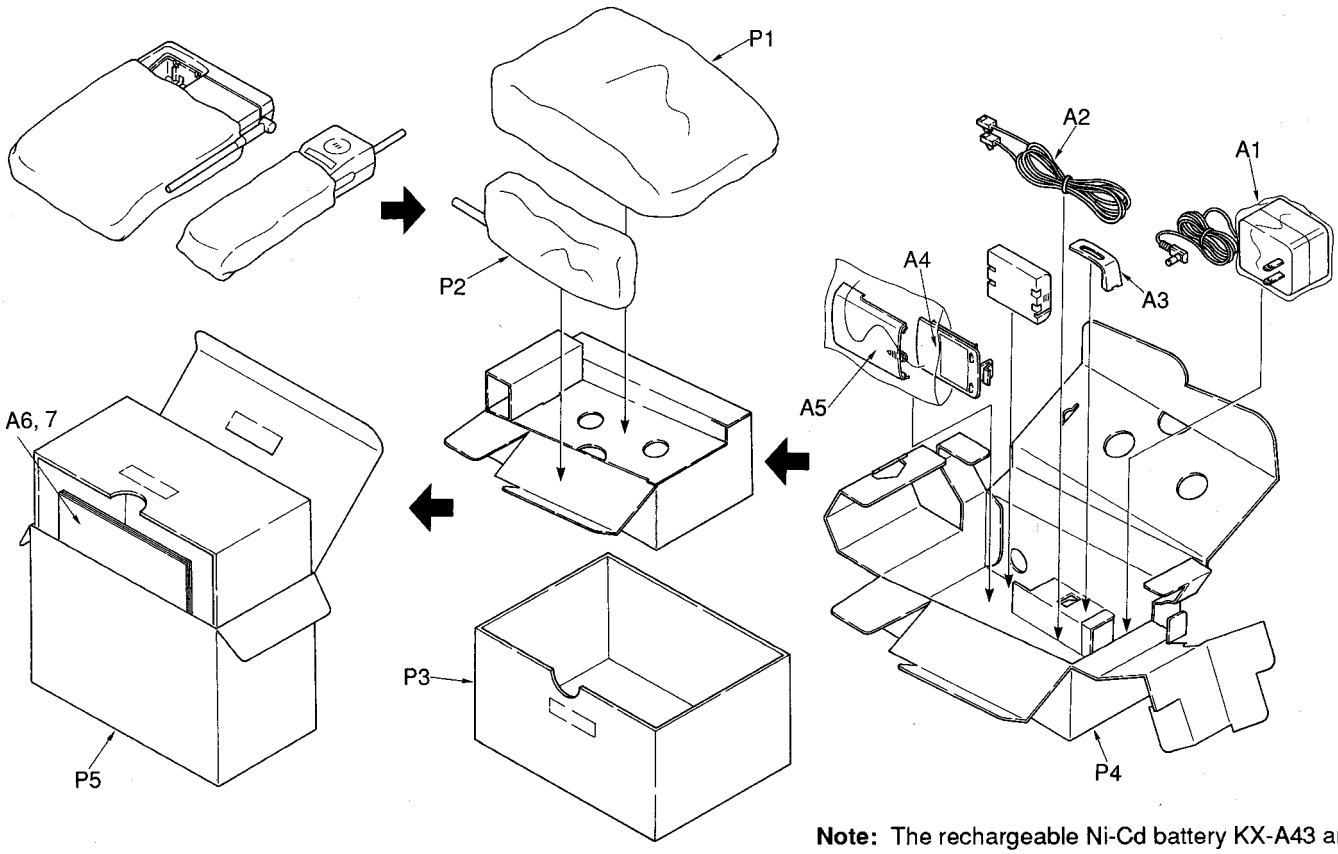

Note: The rechargeable Ni-Cd battery KX-A43 are available through sales route of Panasonic.

Fig. 33

FIXTURES AND TOOLS

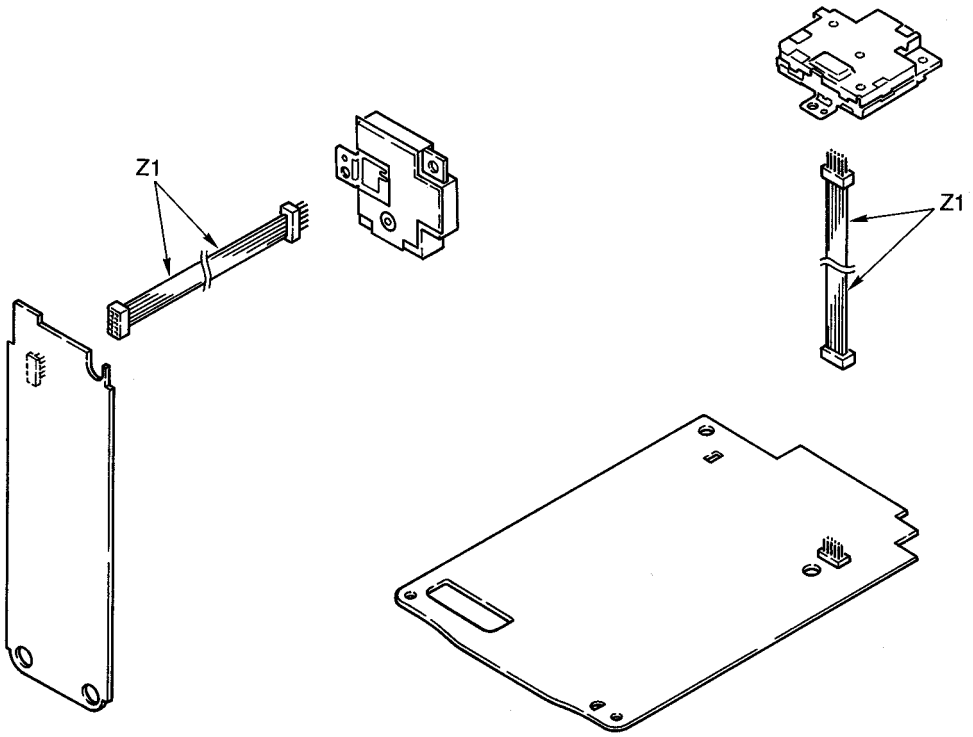

Fig. 34

This replacement parts list is U.S.A. version only.

REPLACEMENT PARTS LIST

Model KX-T9500H

1. RTL (Retention Time Limited)

Note: The marking (RTL) indicates that the Retention Time is limited for this item. After the discontinuation of this assembly in production, the item will continue to be available for a specific period of time. The retention period of availability is dependent on the type of assembly, and in accordance with the laws governing part and product retention. After the end of this period, the assembly will no longer be available.

2. Important safety notice
   Components identified by the ⚠ mark special characteristics important for safety. When replacing any of these components, use only manufacturer's specified parts.
3. The S mark indicates service standard parts and may differ from production parts.

4. RESISTORS & CAPACITORS
   Unless otherwise specified.
   All resistors are in ohms (Ω) K=1000Ω, M=1000KΩ
   All capacitors are in MICRO FARADS (μF) P=μμF
   *Type &Wattage of Resistor

Type

ERC:Solid	ERX:Metal Film	PQ4R:Carbon
ERD:Carbon	ERG:Metal Oxide	ERS:Fusible Resistor
PQRD:Carbon	ER0:Metal Film	ERF:Cement Resistor

Wattage

10,16:1/8W	14,25:1/4W	12:1/2W	1:1W	2:2W	3:3W

*Type & Voltage of Capacitor

Type

ECFD:Semi-Conductor	ECCD,ECKD,ECBT,PQCBC : Ceramic
ECQS:Styrol	ECQE,ECQV,ECQG : Polyester
PQCUV:Chip	ECEA,ECSZ : Electrolytic
ECQMS:Mica	ECQP : Polypropylene

Voltage

ECQ Type	ECQG ECQV Type	ECSZ Type	Others	
1H: 50V	05: 50V	0F:3.15V	0J :6.3V	1V :35V
2A:100V	1:100V	1A:10V	1A :10V	50,1H:50V
2E:250V	2:200V	1V:35V	1C :16V	1J :63V
2H:500V		0J:6.3V	1E,25:25V	2A :100V

Ref. No.	Part No.	Part Name & Description	Pcs/Set
		CABINET & ELECTRICAL PARTS	
1	PQKM10155X2	CABINET BODY	1
2	PQYF10062X1	CABINET PLATE	1
3	PQSA10031Z	ANTENNA	3
4	PQBC10165Z1	BUTTON	1
5	PQJT10087Z	BATTERY TERMINAL	2
6	PQJT10088Z	BATTERY TERMINAL	3
7	PQHR10298Z	SPACER	1
8	PQHR10320Z	CHASSIS	1
9	PQQT11058X	INDICATION LABEL	1
10	PQHX10508Z	INSULATOR	1
	XTW3+S10P	SCREW	3
	XTW3+S12P	SCREW	5
	XYC3+CJ10	SCREW	2

Ref. No.	Part No.	Part Name & Description	Pcs/Set
		MAIN P.C. BOARD PARTS	
PCB1	PQWPT9500HM	P.C. BOARD ASS'Y (RTL)	1
		(ICS)	
IC1	PQVIPC78M06A	IC	1
IC2	PQVIJM4560M	IC	1
IC3	AN6159FA	IC	1
IC4	MN150808KJAG	IC	1
IC5	PQVITC7W04FL	IC	1
		(TRANSISTORS)	
Q1	2SA1625	TRANSISTOR(SI)	1
Q10	2SC4116	LED	1
Q11	2SD2137	LED	1
Q12	2SC4116	TRANSISTOR(SI)	1
Q14	2SC4116	TRANSISTOR(SI)	1
Q16	2SB1218A	TRANSISTOR(SI)	1
Q17	2SC4116	TRANSISTOR(SI)	1
Q18	2SC4116	TRANSISTOR(SI)	1
Q19	2SC4116	TRANSISTOR(SI)	1
Q20	PQVTDTB123E	TRANSISTOR(SI)	1
Q21	PQVTDTB123E	TRANSISTOR(SI)	1
Q22	2SD1819A	TRANSISTOR(SI)	1
		(DIODES)	
D1	PQVDS1ZB40F1	DIODE(SI)	1
D2	PQVDR11M2	DIODE(SI) S	1
D3	1SS131	DIODE(SI)	1
D6	1SS131	DIODE(SI)	1
D8	1SS131	DIODE(SI)	1
D10	LN21RCPHV	LED	1
D11	LN31GCPHV	LED	1
D12	MA110	DIODE(SI)	1
D13	MA110	DIODE(SI)	1
D14	MA110	DIODE(SI)	1
D15	1SS131	DIODE(SI)	1
D16	MA8033	DIODE(SI)	1
D18	MA8220	DIODE(SI)	1
D19	MA8220	DIODE(SI)	1
D20	MA110	DIODE(SI)	1
		(SWITCHES)	
S1	EVQQJJ05Q	SWITCH	1
S2	PQSS2A27W	SWITCH	1
		(VARISTORS)	
SA1	PQVDDSS301L	VARISTOR	1
SA2	PQVDDSA242M	VARISTOR	1
		(VARIABLE RESISTORS)	
VR1	EVNDXAA03B54	VARIABLE RESISTOR	1
VR4	EVNDXAA03B54	VARIABLE RESISTOR	1
		(CRYSTAL OSCILLATOR)	
X1	PQVCJ3581N9Z	CRYSTAL OSCILLATOR	1
X3	PQVCJ2094N4R	CRYSTAL OSCILLATOR	1
		(JACKS)	
JJ1	PQJJ1B4Y	JACK	1
JJ2	PQJJ1TA9Z	JACK	1

This replacement parts list is U.S.A. version only.

Ref. No.	Part No.	Part Name, Description & Value	Pcs/Set
		(CONNECTORS)	
CN1	PQJP10B01Z	CONNECTOR	1
CN3	PQJP03R13Z	CONNECTOR	1
		(COILS AND TRANSFORMER)	
L1	ELEV330KA	COIL	1
L2	ELEV330KA	COIL	1
L5	PQLQZM100K	COIL	1
L6	PQLQZM100K	COIL	1
T1	PQLT8F3A	TRANSFORMER	1
		(PHOTO ELECTRIC TRANSDUCERS)	
PC1	PQVIPC814K	PHOTO ELECTRIC TRANSDUCER	1
PC2	PQVITLP627	PHOTO ELECTRIC TRANSDUCER	1
		(OTHERS)	
PO1	PQRPAR390N	THERMISTOR	1
F1	PQVFCFUM455E	CERAMIC FILTER	1
L3	PQVFCDBM455C	CERAMIC FILTER	1
		(RESISTORS)	
R1	ERDS2TJ473	47K	1
R2	ERJ3GEYJ104	100K	1
R3	ERJ3GEYJ472	4.7K	1
R4	ERJ3GEYJ103	10K	1
R11	PQ4R18XJ000	0	1
R12	ERDS2TJ154	150K	1
R13	ERJ6GEYF183	18K	1
R14	ERJ3GEYJ243	24K	1
R15	ERJ3GEYF332	3.3K	1
R16	ERJ3GEYJ154	150K	1
R17	ERDS1TJ331	330	1
R18	ERJ3GEYJ274	270K	1
R19	ERJ3GEYJ333	33K	1
R20	ERJ3GEYJ104	100K	1
R21	ERJ3GEYJ823	82K	1
R22	ERJ3GEYJ100	10	1
R23	ERJ3GEYJ332	3.3K	1
R24	PQ4R10XJ561	560	1
R25	ERDS1TJ270	27	1
R27	ERJ3GEYJ102	1K	1
R28	ERJ3GEYJ222	2.2K	1
R29	ERJ3GEYJ182	1.8K	1
R30	PQ4R10XJ103	10K	1
R33	PQ4R18XJ122	1.2K	1
R34	PQ4R18XJ122	1.2K	1
R35	PQ4R18XJ680	68	1
R36	PQ4R18XJ680	68	1
R37	ERJ3GEYJ562	5.6K	1
R38	ERJ3GEYJ102	1K	1
R39	ERJ3GEYJ333	33K	1
R40	ERJ3GEYJ682	6.8K	1
R45	ERJ3GEYJ154	150K	1
R47	ERJ3GEYJ103	10K	1
R48	ERJ3GEYJ473	47K	1
R49	ERJ3GEYJ103	10K	1
R50	ERJ3GEYJ473	47K	1
R52	ERJ3GEYJ682	6.8K	1
R57	ERJ3GEYJ274	270K	1
R58	ERJ3GEYJ272	2.7K	1
R59	ERJ3GEYJ682	6.8K	1
R60	ERJ3GEYJ102	1K	1
R61	ERJ3GEYJ223	22K	1
R62	ERJ3GEYJ223	22K	1

Ref. No.	Part No.	Value	Pcs/Set
R63	ERJ3GEYJ104	100K	1
R64	PQ4R18XJ104	100K	1
R65	ERJ3GEYJ184	180K	1
R66	ERJ3GEYJ105	1M	1
R67	ERJ3GEYJ185	1.8M	1
R69	ERJ3GEYJ152	1.5K	1
R70	ERJ3GEYJ223	22K	1
R71	ERJ3GEYJ243	24K	1
R72	ERJ3GEYJ393	39K	1
R73	ERJ3GEYJ103	10K	1
R74	ERJ3GEYJ393	39K	1
R75	ERJ3GEYJ103	10K	1
R76	ERJ3GEYJ392	3.9K	1
R77	ERJ3GEYJ103	10K	1
R78	ERJ3GEYJ273	27K	1
R81	ERJ3GEYJ822	8.2K	1
R82	ERJ3GEYJ823	82K	1
R83	ERJ3GEYJ472	4.7K	1
R84	ERJ3GEYJ563	56K	1
R85	ERJ3GEYJ183	18K	1
R86	ERJ3GEYJ564	560K	1
R87	ERJ3GEYJ103	10K	1
R88	ERJ3GEYJ183	18K	1
R89	ERJ3GEYJ153	15K	1
R90	ERJ3GEYJ103	10K	1
R93	ERJ3GEYJ105	1M	1
R95	ERJ3GEYJ681	680	1
R96	ERJ3GEYJ681	680	1
R97	ERJ3GEYJ102	1K	1
R98	ERJ3GEYJ105	1M	1
R99	ERJ3GEYJ101	100	1
R100	ERJ3GEYJ102	1K	1
R101	ERJ3GEYJ102	1K	1
R102	ERJ3GEYJ100	10	1
R103	ERJ3GEYJ100	10	1
R104	ERJ3GEYJ104	100K	1
R105	ERJ3GEYJ103	10K	1
R106	ERJ3GEYJ473	47K	1
R107	ERJ3GEYJ822	8.2K	1
R108	ERJ3GEYJ223	22K	1
R109	ERJ3GEYJ563	56K	1
R110	ERJ3GEYJ822	8.2K	1
R111	ERJ3GEYJ562	5.6K	1
R112	ERJ3GEYJ100	10	1
R113	ERJ3GEYJ100	10	1
R114	ERJ3GEYJ100	10	1
R121	ERJ3GEYJ103	10K	1
R127	ERJ3GEYJ100	10	1
R128	ERJ3GEYJ100	10	1
R129	ERJ3GEYJ100	10	1
R130	ERJ3GEYJ100	10	1
R131	ERJ3GEYJ473	47K	1
R132	ERJ3GEYJ564	560K	1
R134	ERJ3GEYJ104	100K	1
R135	ERJ3GEYJ392	3.9K	1
R136	ERJ3GEYJ101	100	1
R137	ERJ3GEYJ273	27K	1
R138	ERJ3GEYJ472	4.7K	1
R139	ERJ3GEYJ104	100K	1
R140	ERJ3GEYJ223	22K	1
R141	PQ4R18XJ000	0	1
R142	ERJ3GEYJ472	4.7K	1
R143	ERJ3GEYJ472	4.7K	1
R146	ERJ3GEYJ683	68K	1
R147	ERJ3GEYJ223	22K	1
R148	PQ4R18XJ153	15K	1
R149	ERJ3GEYJ563	56K	1
R150	ERJ3GEYJ104	100K	1
R151	ERJ3GEYJ105	1M	1
R152	ERJ3GEYJ105	1M	1
R153	ERJ3GEYJ104	100K	1

This replacement parts list is U.S.A. version only.

Ref. No.	Part No.	Value		Pcs/Set
R154	ERJ3GEYJ332	3.3K		1
R155	ERJ3GEYJ473	47K		1
R156	ERJ3GEYJ103	10K		1
R157	ERJ3GEYJ104	100K		1
R160	PQ4R18XJ103	10K		1
R301	PQ4R18XJ330	33		1
R302	PQ4R18XJ330	33		1
R303	PQ4R18XJ270	27		1
R304	PQ4R18XJ470	47		1
R305	PQ4R18XJ470	47		1
R306	PQ4R18XJ560	56		1
L7	ERDS2TJ822	8.2K		1
		(CAPACITORS)		
C1	ECQE2224KF	0.22		1
C2	ECKD2H681KB	680P	S	1
C3	ECKD2H681KB	680P	S	1
C10	PQCUV1E104MD	0.1		1
C11	PQCUV1E473MD	0.047		1
C12	ECUV1H153KBV	0.015		1
C13	ECUV1H101JCV	100P		1
C15	ECUV1H331JCV	330P		1
C16	PQCUV1E104MD	0.1		1
C17	ECEA1CKS220	22		1
C18	ECUV1H471JCV	470P		1
C19	ECEA1CKS220	22		1
C20	ECEA1EU221	220		1
C21	ECEA1CKS470	47		1
C22	PQCUV1H105JC	1	S	1
C23	ECEA1CU331	330		1
C25	ECUV1E105ZF	1	S	1
C26	EECFME5R5473	0.047		1
C27	ECUV1H104ZFV	0.1	S	1
C31	PQCUV1H105JC	1	S	1
C37	PQCUV1E104MD	0.1		1
C41	PQCUV1H105JC	1	S	1
C42	ECEA0JKS470	47		1
C43	PQCUV1H223KB	0.022	S	1
C44	PQCUV1H105JC	1	S	1
C45	ECUV1H104ZFV	0.1	S	1
C46	ECEA1CKS100	10	S	1
C47	ECUV1H104ZFV	0.1	S	1
C48	ECUV1H104ZFV	0.1	S	1
C49	PQCUV1H105JC	1	S	1
C50	ECUV1H102KBV	0.001		1
C51	ECUV1H101JCV	100P		1
C52	ECUV1H473MDV	0.047	S	1
C53	ECUV1H153KBV	0.015		1
C54	PQCUV1H180JC	18P		1
C55	ECUV1H180JCV	18P		1
C56	ECUV1H090DCV	9P		1
C57	ECEA0JU471	470		1
C58	PQCUV1E104MD	0.1		1
C59	PQCUV1E104MD	0.1		1
C60	ERJ3GEYJ000	0		1
C61	ECUV1H333KDV	0.033	S	1
C62	ECUV1H333KDV	0.033	S	1
C63	PQCUV1H105JC	1	S	1
C64	ECEA1CKS100	10	S	1
C65	ECEA1HKS4R7	4.7		1
C66	ECUV1H682KBV	0.0068		1
C67	PQCUV1H103KB	0.01	S	1
C68	ECEA1EU470	47	S	1
C69	ECUV1H104ZFV	0.1	S	1
C70	ECUV1H104ZFV	0.1	S	1
C71	ECUV1H103KBV	0.01	S	1
C72	ECUV1H223KBV	0.022	S	1

Ref. No.	Part No.	Part Name, Description & Value		Pcs/Set
C73	ECUV1H333KDV	0.033	S	1
C74	ECEA1HKS4R7	4.7		1
C75	ECEA1CKS100	10	S	1
C76	ECEA1HKS4R7	4.7		1
C77	ECUV1H104ZFV	0.1	S	1
C78	ECUV1H472KBV	0.0047		1
C80	ECUV1H104ZFV	0.1	S	1
C81	ECUV1H103KBV	0.01	S	1
C82	ECEA0JKS470	47		1
C83	PQCUV1H105JC	1	S	1
C84	ECUV1H180JCV	18P		1
C85	ECUV1H180JCV	18P		1
C86	ECEA0JKS470	47		1
C87	ECST1AX106	10	S	1
C88	ECEA0JKS470	47		1
C89	ECUV1H101JCV	100P		1
C90	ECUV1H101JCV	100P		1
C91	ECUV1H101JCV	100P		1
C92	ECUV1H101JCV	100P		1
C93	ECUV1H101JCV	100P		1
C94	ECUV1H101JCV	100P		1
C95	ECUV1H101JCV	100P		1
C96	ECUV1H101JCV	100P		1
C98	ECUV1H104ZFV	0.1	S	1
C100	ECEA1CKS220	22		1
C102	ECUV1H102KBV	0.001		1
C105	PQCUV1H105JC	1	S	1
C106	ECUV1H102KBV	0.001		1
C107	PQCUV1E104MD	0.1		1
C111	ECEA0JSJ331	330	S	1
C112	ECUV1H333KDV	0.033	S	1
C113	ECUV1H103KBV	0.01	S	1
C116	PQCUV1H105JC	1	S	1
C117	PQCUV1H105JC	1	S	1
C118	ECEA1CKS100	10		1
C197	PQCUV1H105JC	1	S	1
C198	ECEA1CKS100	10	S	1
		RF UNIT PARTS		
PCB2	PQLP10090M	P.C. BOARD ASS'Y (RTL)		1
		(ICS)		
IC201	PQVIM64084GP	IC		1
IC202	PQVIPC2746TE	IC		1
		(TRANSISTORS)		
Q201	2SC4099NT106	TRANSISTOR(SI)		1
Q202	2SC4099NT106	TRANSISTOR(SI)		1
Q204	2SC3356R24	TRANSISTOR(SI)		1
Q205	2SC4571R77	TRANSISTOR(SI)	S	1
Q206	2SC4226R24	TRANSISTOR(SI)		1
Q207	2SC5086	TRANSISTOR(SI)		1
Q208	2SC5086	TRANSISTOR(SI)		1
Q209	2SC5086	TRANSISTOR(SI)		1
Q210	2SC5086	TRANSISTOR(SI)		1
		(DIODES)		
D201	PQVD1SV276	DIODE(SI)		1
D202	PQVD1SV276	DIODE(SI)		1
D203	MA110	DIODE(SI)		1

This replacement parts list is U.S.A. version only.

Ref. No.	Part No.	Part Name, Description & Value	Pcs/Set
		(TRIMMER CAPACITORS)	
VC201	PQCVTZB10ZA	TRIMMER CAPACITOR	1
VC202	PQCVTZB06ZA	TRIMMER CAPACITOR	1
VC203	PQCVTZB06ZA	TRIMMER CAPACITOR	1
		(COILS)	
L201	MQLRE6N8JF	COIL	1
L202	PQLQR2M8N2KT	COIL	1
L203	PQLQR2N1R0KT	COIL	1
L204	PQLQR2N1R0KT	COIL	1
L205	PQLQR2M10NKT	COIL	1
L207	PQLQR2M8N2KT	COIL	1
L208	MQLRE5N6JF	COIL	1
L209	PQLQR2M8N2KT	COIL	1
L210	PQLQR2M10NKT	COIL	1
L211	PQLQR2M6N8KT	COIL	1
L212	PQLQR2M10NKT	COIL	1
		(CRYSTAL OSCILLATOR)	
X201	PQVCF1280K1Z	CRYSTAL OSCILLATOR	1
		(CERAMIC FILTERS)	
F201	PQVCM214M15A	CERAMIC FILTER	1
F203	EZFN903AM01	CERAMIC FILTER	1
F204	PQVSNSVA927N	CERAMIC FILTER	1
		(CONNECTOR)	
CN201	PQJS10A82Z	CONNECTOR	1
		(RESISTORS)	
R201	ERJ2GEJ222	2.2K	1
R202	ERJ2GEJ151	150	1
R204	ERJ2GEJ182	1.8K	1
R205	ERJ3GEYJ153	15K	1
R206	ERJ3GEYJ153	15K	1
R207	ERJ3GEYJ333	33K	1
R208	ERJ3GEYJ220	22	1
R209	ERJ3GEYJ470	47	1
R210	ERJ3GEYJ102	1K	1
R211	ERJ3GEYJ472	4.7K	1
R212	ERJ3GEYJ104	100K	1
R213	ERJ3GEYJ152	1.5K	1
R214	ERJ2GEJ561	560	1
R215	ERJ3GEYJ470	47	1
R216	ERJ3GEYJ104	100K	1
R219	ERJ3GEYJ100	10	1
R220	ERJ3GEYJ153	15K	1
R221	ERJ3GEYJ683	68K	1
R222	ERJ3GEYJ470	47	1
R223	ERJ3GEYJ470	47	1
R224	ERJ2GEJ182	1.8K	1
R226	ERJ3GEYJ100	10	1
R227	ERJ3GEYJ473	47K	1
R229	ERJ2GEJ821	820	1
R230	ERJ3GEYJ333	33K	1
R231	ERJ3GEYJ153	15K	1
R232	ERJ3GEYJ153	15K	1
R233	ERJ3GEYJ471	470	1
R236	ERJ2GEJ821	820	1
R237	ERJ3GEYJ471	470	1
R239	ERJ2GEJ682	6.8K	1
R240	ERJ2GEJ682	6.8K	1
R241	ERJ2GEJ271	270	1
R242	ERJ2GEJ682	6.8K	1
R243	ERJ2GEJ682	6.8K	1
R244	ERJ2GEJ271	270	1

Ref. No.	Part No.	Value		Pcs/Set
		(CAPACITORS)		
C201	ECUE1E102KBQ	0.001		1
C202	ECUV1H101JCV	100P		1
C203	ECUE1H2R5BUQ	2.5		1
C204	ECUE1H150JCQ	15P		1
C205	ECST0JX226ZR	22		1
C206	ECUE1H030CCQ	3P		1
C207	ECUV1H104ZFV	0.1	S	1
C208	ECUE1H040CCQ	4P		1
C209	ECUE1H030CCQ	3P		1
C210	ECUV1H332KBV	0.0033		1
C211	ECUV1H332KBV	0.0033		1
C212	ECUV1H104ZFV	0.1	S	1
C213	ECUV1H102KBV	0.001		1
C215	ECUE1E102KBQ	0.001		1
C216	ECUE1H020CCQ	2P		1
C217	ECUV1H101JCV	100P		1
C218	ECUV1H060DCV	6P		1
C219	ECUE1H180JCQ	18P		1
C220	ECUE1C103KBQ	0.01		1
C223	ECUV1H102KBV	0.001		1
C224	ECUE1H030CCQ	3P		1
C225	ECUV1H040CCV	4P		1
C226	ECUE1H020CCQ	2P		1
C227	ECUE1H040CCQ	4P		1
C229	ECUV1H050CCV	5P		1
C230	ECUV1H102KBV	0.001		1
C231	ECUV1H101JCV	100P		1
C232	ECUV1H040CCV	4P		1
C233	ECUV1H100DCV	10P		1
C234	ECUE1E102KBQ	0.001		1
C235	ECUE1H040CCQ	4P		1
C236	ECUE1H040CCQ	4P		1
C237	ECUV1H020CCV	2P		1
C238	ECUV1H510JGV	51P		1
C239	ECST0JX226ZR	22		1
C240	ECUV1H102KBV	0.001		1
C241	ECUV1H104ZFV	0.1	S	1
C242	ECUE1H030CCQ	3P		1
C243	ECUE1H030CCQ	3P		1
C244	ECUE1H030CCQ	3P		1
C245	ECUV1H430JGV	43P		1
C246	ECUE1E102KBQ	0.001		1
C247	ECUV1H120JGV	12P		1
C248	ECUE1H2R5BUQ	2.5		1
C249	ECUV1H102KBV	0.001		1
C250	ECUV1C224KB	0.22		1
C251	ECUV1H562KBV	0.0056		1
C252	ECUV1H562KBV	0.0056		1
C253	ECST0JX226ZR	22		1
C254	ECUV1H103KBV	0.01		1
C255	ECUV1H103KBV	0.01		1
C256	ECUV1H330JCV	33P		1
C257	ECUV1H330JCV	33P		1
C258	ECUV1H330JCV	33P		1
C259	ECUV1H101JCV	100P		1
C260	ECUV1H020CCV	2P		1
C261	ECUE1H150JCQ	15P		1
C262	ECUV1H010CCV	1P		1
C263	ECUE1E102KBQ	0.001		1
C264	ECUV1H102KBV	0.001		1
C265	ECUV1H040CCV	4P		1
C266	ECUV1H100DCV	10P		1

This replacement parts list is U.S.A. version only.

REPLACEMENT PARTS LIST

Model KX-T9500R

1. RTL (Retention Time Limited)

Note: The marking (RTL) indicates that the Retention Time is limited for this item. After the discontinuation of this assembly in production, the item will continue to be available for a specific period of time. The retention period of availability is dependent on the type of assembly, and in accordance with the laws governing part and product retention. After the end of this period, the assembly will no longer be available.

2. Important safety notice
   Components identified by the ⚠ mark special characteristics important for safety. When replacing any of these components, use only manufacturer's specified parts.
3. The S mark indicates service standard parts and may differ from production parts.

4. RESISTORS & CAPACITORS
   Unless otherwise specified.
   All resistors are in ohms (Ω) K=1000Ω, M=1000KΩ
   All capacitors are in MICRO FARADS (μF) P=μμF
   *Type &Wattage of Resistor

Type

ERC:Solid	ERX:Metal Film	PQ4R:Carbon
ERD:Carbon	ERG:Metal Oxide	ERS:Fusible Resistor
PQRD:Carbon	ER0:Metal Film	ERF:Cement Resistor

Wattage

10,16:1/8W	14,25:1/4W	12:1/2W	1:1W	2:2W	3:3W

*Type & Voltage of Capacitor

Type

ECFD:Semi-Conductor	ECCD,ECKD,ECBT,PQCBC : Ceramic
ECQS:Styrol	ECQE,ECQV,ECQG : Polyester
PQCUV:Chip	ECEA,ECSZ : Electrolytic
ECQMS:Mica	ECQP : Polypropylene

Voltage

ECQ Type	ECQG ECQV Type	ECSZ Type	Others	
1H: 50V	05: 50V	0F:3.15V	0J :6.3V	1V :35V
2A:100V	1:100V	1A:10V	1A :10V	50,1H:50V
2E:250V	2:200V	1V:35V	1C :16V	1J :63V
2H:500V		0J:6.3V	1E,25:25V	2A :100V

Ref. No.	Part No.	Part Name & Description	Pcs/Set
		CABINET & ELECTRICAL PARTS	
101	PQKM10159X2	CABINET BODY	1
102	PQKF10119Z2	CABINET PLATE	1
103	PQSA808X	ANTENNA	1
104	PQSX10018Z	KEYBOARD SWITCH	1
105	PQSX10019Z	KEYBOARD SWITCH	1
106	PQBD10032Z1	KNOB	1
107	PQAX3P18Z	SPEAKER	1
108	PQEFBQM111G1	BUZZER S	1
109	PQJM122Z	MICROPHONE	1
110	PQJT10085Z	BATTERY TERMINAL	3
111	PQJT10086Z	BATTERY TERMINAL	2
112	PQHX10085Z	ID COVER	1
113	PQKE10038Z2	HANGER	1
114	PQHR10305Z	SPACER	1
115	PQHG10286Z	SPACER	1
116	XWC26BFN	WASHER	1
117	PQHG10326Z	SPACER	1
118	PQHX10503Z	SPACER	1
119	PQHX10508Z	INSULATOR	1
	XTN26+6J	SCREW	2
	XTW26+12F	SCREW	4
			1

Ref. No.	Part No.	Part Name & Description	Pcs/Set
		MAIN P.C. BOARD PARTS	
PCB100	PQWPT9500RM	P.C. BOARD ASS'Y (RTL)	1
		(ICS)	
IC1	AN6159FA	IC	1
IC2	PQVIXC3002MR	IC	1
IC3	PQVIA8184SLT	IC	1
IC4	PQVISC78184D	IC	1
IC6	PQVI4829B99H	IC	1
		(TRANSISTORS)	
Q1	2SD1328	TRANSISTOR(SI)	1
Q2	2SC4116	TRANSISTOR(SI)	1
Q6	2SC4116	TRANSISTOR(SI)	1
Q7	2SC4116	TRANSISTOR(SI)	1
Q9	2SB1218A	TRANSISTOR(SI)	1
Q10	PQVTDTC143E	TRANSISTOR(SI)	1
Q11	PQVTDTC143E	TRANSISTOR(SI)	1
Q13	PQVTDTA143EU	TRANSISTOR(SI)	1
Q14	PQVTDTB123E	TRANSISTOR(SI)	1
Q15	2SC4116	TRANSISTOR(SI)	1
Q16	PQVTDTB123E	TRANSISTOR(SI)	1
Q17	PQVTDTB123E	TRANSISTOR(SI)	1
Q18	PQVTDTA143EU	TRANSISTOR(SI)	1
Q19	2SC4116	TRANSISTOR(SI)	1
		(DIODES)	
D1	MA8150	DIODE(SI)	1
D3	MA110	DIODE(SI)	1
D5	PQVDRB751H4	DIODE(SI)	1
D6	LN1371G	LED	1
D7	LN1371G	LED	1
D8	LN1371G	LED	1
D9	LN1371G	LED	1
D10	LN1261C	LED	1
D11	MA110	DIODE(SI)	1
D12	MA110	DIODE(SI)	1
D13	MA110	DIODE(SI)	1
D14	MA110	DIODE(SI)	1
D15	MA110	DIODE(SI)	1
D16	MA8039	DIODE(SI)	1
DG	MA110	DIODE(SI)	1
		(VARIABLE RESISTORS)	
VR1	EVM1YSX50B24	VARIABLE RESISTOR	1
VR3	EVM1YSX50B54	VARIABLE RESISTOR	1
VR4	EVM1SSX50B53	VARIABLE RESISTOR	1
		(CRYSTAL OSCILLATORS)	
X1	PQVCE2094N4R	CRYSTAL OSCILLATOR	1
X3	PQVBTCS4.00M	CRYSTAL OSCILLATOR	1
X4	PQVCE3276N97	CRYSTAL OSCILLATOR	1
		(CERAMIC FILTERS)	
L1	PQVFCDBC455M	CERAMIC FILTER	1
F1	PQVFSFPC455E	CERAMIC FILTER	1
		(SWITCH)	
S1	ESD11H120	SLIDE SWITCH	1
		(CONNECTOR)	
CN1	PQJP10B01Z	CONNECTOR	1

This replacement parts list is U.S.A. version only.

Ref. No.	Part No.	Value	Pcs/Set
		(RESISTORS)	
R1	ERJ3GEYJ684	680K	1
R2	ERJ3GEYJ100	10	1
R3	ERJ3GEYJ273	27K	1
R4	ERJ3GEYJ332	3.3K	1
R5	ERJ3GEYJ273	27K	1
R8	ERJ3GEYJ473	47K	1
R9	ERJ3GEYJ183	18K	1
R11	ERJ3GEYJ823	82K	1
R13	ERJ3GEYJ152	1.5K	1
R14	ERJ3GEYJ000	0	1
R15	ERJ3GEYJ104	100K	1
R16	ERJ3GEYJ473	47K	1
R18	ERJ3GEYJ564	560K	1
R19	ERJ3GEYJ103	10K	1
R20	ERJ3GEYJ183	18K	1
R21	ERJ3GEYJ223	22K	1
R22	ERJ3GEYJ183	18K	1
R23	ERJ3GEYJ104	100K	1
R24	ERJ3GEYJ184	180K	1
R25	ERJ3GEYJ823	82K	1
R26	ERJ3GEYJ333	33K	1
R27	ERJ3GEYJ122	1.2K	1
R28	ERJ3GEYJ000	0	1
R29	ERJ3GEYJ472	4.7K	1
R30	ERJ3GEYJ104	100K	1
R31	ERJ3GEYJ103	10K	1
R37	ERJ3GEYJ474	470K	1
R38	ERJ3GEYJ105	1M	1
R39	ERJ3GEYJ102	1K	1
R40	ERJ3GEYJ681	680	1
R41	ERJ3GEYJ100	10	1
R42	ERJ3GEYJ100	10	1
R45	ERJ3GEYJ100	10	1
R46	ERJ3GEYJ102	1K	1
R47	ERJ3GEYJ102	1K	1
R48	ERJ3GEYJ102	1K	1
R49	ERJ3GEYJ102	1K	1
R51	ERJ2GEJ124	120K	1
R53	ERJ2GEJ563	56K	1
R55	ERJ3GEYJ273	27K	1
R57	ERJ2GEJ153	15K	1
R58	ERJ3GEYJ332	3.3K	1
R59	ERJ3GEYJ392	3.9K	1
R60	ERJ3GEYJ104	100K	1
R61	ERJ3GEYJ102	1K	1
R62	ERJ3GEYJ222	2.2K	1
R63	ERJ3GEYJ334	330K	1
R64	ERJ3GEYJ103	10K	1
R65	ERJ3GEYJ472	4.7K	1
R66	ERJ3GEYJ124	120K	1
R67	ERJ3GEYJ474	470K	1
R71	PQ4R10XJ100	10	1
R72	PQ4R10XJ100	10	1
R79	ERJ3GEYJ103	10K	1
R80	ERJ3GEYJ104	100K	1
R81	ERJ3GEYJ683	68K	1
R82	ERJ3GEYJ391	390	1
R83	ERJ3GEYJ391	390	1
R84	ERJ3GEYJ391	390	1
R85	ERJ3GEYJ391	390	1
R96	ERJ3GEYJ000	0	1
R97	ERJ3GEYJ000	0	1
R98	ERJ3GEYJ000	0	1
R99	ERJ3GEYJ000	0	1
R100	ERJ3GEYJ101	100	1
R101	ERJ3GEYJ101	100	1
R102	ERJ3GEYJ101	100	1
R103	ERJ3GEYJ101	100	1
R104	ERJ3GEYJ100	10	1
R106	ERJ3GEYJ120	12	1

Ref. No.	Part No.	Value		Pcs/Set
R108	ERJ3GEYJ270	27		1
R110	ERJ3GEYJ102	1K		1
R111	ERJ3GEYJ102	1K		1
R112	ERJ3GEYJ102	1K		1
R113	ERJ3GEYJ102	1K		1
R116	ERJ3GEYJ224	220K		1
R117	ERJ3GEYJ391	390		1
R118	ERJ3GEYJ392	3.9K		1
R120	PQ4R18XJ000	0		1
R121	PQ4R18XJ000	0		1
R123	ERJ3GEYJ102	1K		1
R124	ERJ3GEYJ102	1K		1
R125	ERJ3GEYJ102	1K		1
R126	ERJ3GEYJ102	1K		1
R127	ERJ3GEYJ102	1K		1
R128	ERJ3GEYJ000	0		1
R149	ERJ3GEYJ183	18K		1
R153	ERJ3GEYJ000	0		1
R155	ERJ3GEYJ823	82K		1
R157	ERJ3GEYJ000	0		1
R158	ERJ3GEYJ000	0		1
R159	ERJ3GEYJ103	10K		1
R164	ERJ3GEYJ154	150K		1
R165	ERJ3GEYJ000	0		1
R166	ERJ3GEYJ472	4.7K		1
R167	ERJ3GEYJ562	5.6K		1
R168	ERJ3GEYJ000	0		1
R169	ERJ3GEYJ000	0		1
R172	ERJ3GEYJ222	2.2K		1
R173	ERJ3GEYJ101	100		1
R174	ERJ3GEYJ222	2.2K		1
R175	ERJ3GEYJ152	1.5K		1
R176	ERJ3GEYJ104	100K		1
R177	ERJ3GEYJ103	10K		1
R178	ERJ3GEYJ332	3.3K		1
R179	ERJ3GEYJ102	1K		1
R180	ERJ3GEYJ824	820K		1
R181	ERJ3GEYJ681	680		1
R182	ERJ3GEYJ102	1K		1
R183	ERJ3GEYJ103	10K		1
R195	ERJ3GEYJ000	0		1
R196	ERJ3GEYJ102	1K		1
J1	ECUV1H102KBV	0.001		1
J16	ERJ3GEYJ102	1K		1
J17	ERJ3GEYJ102	1K		1
D17	PQ4R10XJ000	0		1
		(CAPACITORS)		
C1	ECST0GY226	22		1
C2	ERJ3GEYJ000	0		1
C3	PQCUV1E104MD	0.1		1
C4	PQCUV1E104MD	0.1		1
C5	ECUV1H223KBV	0.022	S	1
C6	ECUV1H223KBV	0.022	S	1
C7	PQCUV1H105JC	1	S	1
C8	ECST0JX106	10	S	1
C9	ECST0JY475	4.7		1
C10	PQCUV1H105JC	1	S	1
C11	ECST0GY226	22		1
C12	PQCUV1E104MD	0.1	S	1
C13	ECUV1H220JCV	22P		1
C14	ECUV1H180JCV	18P		1
C15	ECUV1H102KBV	0.001		1
C16	ECUV1H153KBV	0.015	S	1
C18	ECUV1H101JCV	100P		1
C19	ECUV1H102KBV	0.001		1
C20	PQCUV1H105JC	1	S	1
C21	ECUV1H392KBV	0.0039		1
C22	ECST0JX226	22		1
C23	PQCUV1E104MD	0.1		1

This replacement parts list is U.S.A. version only.

Ref. No.	Part No.	Part Name, Description & Value		Pcs/Set
C24	PQCUV1E104MD	0.1		1
C25	ECUV1H103KBV	0.01	S	1
C26	PQCUV1H103KB	0.01	S	1
C27	PQCUV1H223KB	0.022	S	1
C28	ECST0JY475	4.7		1
C29	ECST0JX106	10	S	1
C30	ECST0JY475	4.7		1
C31	PQCUV1E104MD	0.1		1
C32	ECST0JX106	10	S	1
C33	PQCUV1E104MD	0.1		1
C34	PQCUV1H105JC	1	S	1
C35	PQCUV1H105JC	1	S	1
C36	ECST0JX106	10	S	1
C37	PQCUV1E104MD	0.1		1
C38	PQ4R10XJ100	10		1
C40	ECUV1H180JCV	18P		1
C41	PQCUV1H103KB	0.01	S	1
C43	PQCUV1E104MD	0.1	S	1
C44	ECUV1H104ZFV	0.1	S	1
C45	ECUV1H103KBV	0.01	S	1
C47	ECEA1AKS221	220	S	1
C49	ECST0GY226	22		1
C50	ECST0JX106	10	S	1
C51	ECST0GY226	22		1
C61	ECUV1H180JCV	18P		1
C62	ECST0JX226	22		1
C63	PQCUV1C683MD	0.068		1
C64	PQCUV1H105JC	1	S	1
C65	PQCUV1H473MD	0.047		1
C69	PQCUV1H105JC	1	S	1
C70	PQCUV1H105JC	1	S	1
C71	ECUV1H222KBV	0.0022		1
C74	ECUV1H680JCV	68P		1
C76	ECUV1H332KBV	0.0033		1
C77	ECST0JX226	22		1
C78	PQCUV1H105JC	1	S	1
C80	PQCUV1H105JC	1	S	1
C81	PQCUV1H105JC	1	S	1
C82	PQCUV1H105JC	1	S	1
C100	PQCUV1H105JC	1	S	1
		RF UNIT PARTS		
PCB200	PQLP10104M	P.C. BOARD ASS'Y (RTL)		
		(IC)		
IC201	PQVIM64084GP	IC		1
IC202	PQVIPC2746TE	IC		1
		(TRANSISTORS)		
Q201	2SC4099NT106	TRANSISTOR(SI)		1
Q202	2SC4099NT106	TRANSISTOR(SI)		1
Q204	2SC3356R24	TRANSISTOR(SI)		1
Q205	2SC4571R77	TRANSISTOR(SI)	S	1
Q206	2SC4226R24	TRANSISTOR(SI)		1
Q207	2SC5007	TRANSISTOR(SI)		1
Q208	2AC5086	TRANSISTOR(SI)		1
Q209	2AC5086	TRANSISTOR(SI)		1
Q210	2SC5007	TRANSISTOR(SI)		1
		(COILS)		
L201	MQLRE6N8JF	COIL		1
L202	PQLQR2M8N2KT	COIL		1
L203	PQLQR2N1R0KT	COIL		1

Ref. No.	Part No.	Part Name, Description & Value	Pcs/Set
L204	PQLQR2N1R0KT	COIL	1
L205	PQLQR2M10NKT	COIL	1
L207	PQLQR2M8N2KT	COIL	1
L208	MQLRE8N2JF	COIL	1
L209	PQLQR2M8N2KT	COIL	1
L210	PQLQR2M12NK	COIL	1
L212	PQLQR2M10NKT	COIL	1
		(DIODES)	
D201	PQVD1SV276	DIODE(SI)	1
D202	PQVD1SV276	DIODE(SI)	1
D203	MA110	DIODE(SI)	1
		(CERAMIC FILTERS)	
F201	PQVCM214M15A	CERAMIC FILTER	1
F203	EZFN927AM01	CERAMIC FILTER	1
F204	PQVSNSVA903N	CERAMIC FILTER	1
		(TRIMMER CAPACITORS)	
VC201	PQCVTZB10ZA	TRIMMER CAPACITOR	1
VC202	PQCVTZB06ZA	TRIMMER CAPACITOR	1
VC203	PQCVTZB06ZA	TRIMMER CAPACITOR	1
		(OTHERS)	
X201	PQVCF1280N1Z	CRYSTAL OSCILLATOR	1
CN201	PQJS10A82Z	CONNECTOR	1
		(RESISTORS)	
R201	ERJ2GEJ222	2.2K	1
R202	ERJ2GEJ151	150	1
R204	ERJ2GEJ182	1.8K	1
R205	ERJ3GEYJ153	15K	1
R206	ERJ3GEYJ153	15K	1
R207	ERJ3GEYJ333	33K	1
R208	ERJ3GEYJ220	22	1
R209	ERJ3GEYJ470	47	1
R210	ERJ3GEYJ102	1K	1
R211	ERJ3GEYJ472	4.7K	1
R212	ERJ3GEYJ104	100K	1
R213	ERJ3GEYJ152	1.5K	1
R214	ERJ2GEJ561	560	1
R215	ERJ3GEYJ470	47	1
R216	ERJ3GEYJ104	100K	1
R219	ERJ3GEYJ100	10	1
R220	ERJ3GEYJ103	10K	1
R221	ERJ3GEYJ683	68K	1
R222	ERJ3GEYJ470	47	1
R223	ERJ3GEYJ470	47	1
R224	ERJ2GEJ182	1.8K	1
R226	ERJ3GEYJ100	10	1
R227	ERJ3GEYJ473	47K	1
R229	ERJ2GEJ821	820	1
R230	ERJ3GEYJ333	33K	1
R231	ERJ3GEYJ153	15K	1
R232	ERJ3GEYJ153	15K	1
R233	ERJ3GEYJ331	330	1
R236	ERJ2GEJ821	820	1
R237	ERJ3GEYJ331	330	1
R239	ERJ2GEJ682	6.8K	1
R240	ERJ2GEJ103	10K	1
R241	ERJ2GEJ271	270	1
R242	ERJ2GEJ682	6.8K	1
R243	ERJ2GEJ103	10K	1
R244	ERJ2GEJ221	220	1

This replacement parts list is U.S.A. version only.

Ref. No.	Part No.	Value		Pcs/Set
		(CAPACITORS)		
C201	ECUE1E102KBQ	0.001		1
C202	ECUV1H101JCV	100P		1
C203	ECUE1H2R5BUQ	2.5		1
C204	ECUE1H150JCQ	15P		1
C205	ECST0GX476	47		1
C206	ECUE1H030CCQ	3P		1
C207	ECUV1H104ZFV	0.1	S	1
C208	ECUE1H040CCQ	4P		1
C209	ECUE1H030CCQ	3P		1
C210	ECUV1H332KBV	0.0033		1
C211	ECUV1H332KBV	0.0033		1
C212	ECUV1H104ZFV	0.1	S	1
C213	ECUV1H102KBV	0.001		1
C215	ECUE1E102KBQ	0.001		1
C216	ECUE1H020CCQ	2P		1
C217	ECUV1H101JCV	100P		1
C218	ECUV1H060DCV	6P		1
C219	ECUE1H180JCQ	18P		1
C220	ECUE1C103KBQ	0.01		1
C223	ECUV1H102KBV	0.001		1
C224	ECUE1H030CCQ	3P		1
C225	ECUV1H060DCV	6P		1
C226	ECUE1H020CCQ	2P		1
C227	ECUE1H100DCQ	10P		1
C230	ECUV1H102KBV	0.001		1
C231	ECUV1H101JCV	100P		1
C232	ECUV1H040CCV	4P		1
C233	ECUV1H220JCV	22P		1
C234	ECUE1E102KBQ	0.001		1
C235	ECUE1H020CCQ	2P		1
C236	ECUE1H040CCQ	4P		1
C237	ECUV1H020CCV	2P		1
C238	ECUV1H510JGV	51P		1
C239	ECST0GX476	47		1
C240	ECUV1H102KBV	0.001		1
C241	ECUV1H104ZFV	0.1	S	1
C242	ECUE1H030CCQ	3P		1
C243	ECUE1H030CCQ	3P		1
C244	ECUE1H030CCQ	3P		1
C245	ECUV1H430JGV	43P		1
C246	ECUE1E102KBQ	0.001		1
C247	ECUV1H120JGV	12P		1
C248	ECUE1H030BUQ	3P		1
C249	ECUV1H102KBV	0.001		1
C250	ECUV1C224KB	0.22		1
C251	ECUV1H562KBV	0.0056		1
C252	ECUV1H562KBV	0.0056		1
C253	ECST0GX476	47		1
C254	ECUV1H103KBV	0.01		1
C255	ECUV1H103KBV	0.01		1
C256	ECUV1H330JCV	33P		1
C257	ECUV1H330JCV	33P		1
C258	ECUV1H330JCV	33P		1
C259	ECUV1H101JCV	100P		1
C260	ECUV1H100DCV	10P		1
C261	ECUE1H150JCQ	15P		1
C262	ECUV1H010CCV	1P		1
C263	ECUE1E102KBQ	0.001		1
C264	ECUV1H102KBV	0.001		1
C265	ECUV1H040CCV	4P		1
C266	ECUV1H220JCV	22P		1

Ref. No.	Part No.	Part Name & Description	Pcs/Set
		ACCESSORIES	
A1	KX-A11-5	AC ADAPTOR ⚠	1
A2	PQJA59V	TEL CORD	1
A3	PQKC10003Z2	BELT CLIP	1
A4	PQKK10045Z2	BATTERY COVER (for BASE UNIT)	1
A5	PQKK10046Z2	BATTERY COVER (for PORTABLE HANDSET)	1
A6	PQQW11112Z	QUICK REFERENCE GUIDE	1
A7	PQQX11200Z	INSTRUCTION BOOK	1
		PACKING MATERIALS	
P1	XZB18X25A02	PROTECTION COVER (for BASE UNIT)	1
P2	XZB10X25A02	PROTECTION COVER (for PORTABLE HANDSET)	1
P3	PQPN10362Z	PAD	1
P4	PQPN10363Z	ACCESSORY BOX	1
P5	PQPK11166Z	GIFT BOX	1
		FIXTURES AND TOOLS	
Z1	PQZZ10K13Z	EXTENSION CORD, 10P	2

Note:
●PQZZ10K13Z is necessity for servicing.