ORDER NO. KM49311689C3

Service Manual

EASA-PHONE

and Technical Guide

Proprietary Wireless Phone
for Electronic Modular Switching System
and Digital Super Hybrid System

KX-T7980BX

(for Asia, Middle Near East and Other areas)

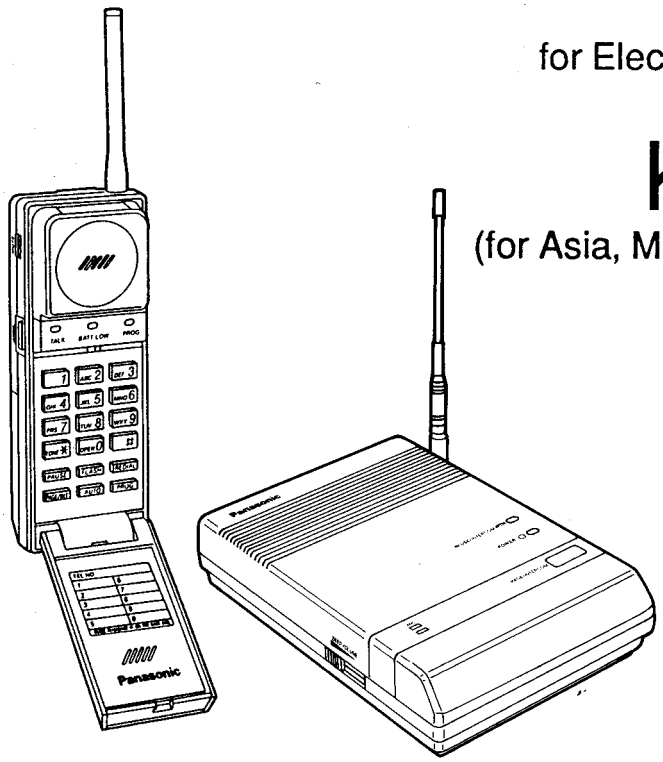

SPECIFICATIONS\ТЕХНИЧЕСКИЕ ХАРАКТЕРИСТИКИ

DISASSEMBLY INSTRUCTIONS\ПОРЯДОК РАЗБОРКИ

CPU DATA (BASE UNIT)\ИНФОРМАЦИЯ О ПРОЦЕССОРЕ (БАЗОВЫЙ БЛОК)

CPU DATA (PORTABLE HANDSET) \ИНФОРМАЦИЯ О ПРОЦЕССОРЕ (ТРУБКА)

ADJUSTMENTS\РЕГУЛИРОВКИ

SCHEMATIC DIAGRAM (KX-T7980BXH)\ПРИНЦИПИАЛЬНАЯ СХЕМА (KX-T7980BXH)

SCHEMATIC DIAGRAM (KX-T7980BXR)\ПРИНЦИПИАЛЬНАЯ СХЕМА (KX-T7980BXR)

BLOCK DIAGRAM (BASE UNIT)\БЛОК-СХЕМА (БАЗОВЫЙ БЛОК)

BLOCK DIAGRAM (PORTABLE HANDSET)\БЛОК-СХЕМА (ТРУБКА)

HOW TO CHANGE ID CODE\СМЕНА ИДЕНТИФИКАЦИОННОГО КОДА

CABINET AND ELECTRICAL PARTS LOCATION (BASE UNIT)\РАСПОЛОЖЕНИЕ ЧАСТЕЙ КОРПУСА И ЭЛЕКТРИЧЕСКИХ ДЕТАЛЕЙ (БАЗОВЫЙ БЛОК)

CABINET AND ELECTRICAL PARTS LOCATION (PORTABLE HANDSET)\РАСПОЛОЖЕНИЕ ЧАСТЕЙ КОРПУСА И ЭЛЕКТРИЧЕСКИХ ДЕТАЛЕЙ (ТРУБКА)

ACCESSORIES AND PACKING MATERIALS\ПРИНАДЛЕЖНОСТИ И УПАКОВОЧНЫЕ МАТЕРИАЛЫ

REPLACEMENT PARTS LIST (BASE UNIT)\СПИСОК ЗАПАСНЫХ ЧАСТЕЙ (БАЗОВЫЙ БЛОК)

REPLACEMENT PARTS LIST (PORTABLE HANDSET)\СПИСОК ЗАПАСНЫХ ЧАСТЕЙ (ТРУБКА)

Panasonic

■ SPECIFICATIONS

	Base Unit	Portable Handset
Power Source:	AC Adaptor	Rechargeable Ni-Cd battery
Receiving Frequency:	40 channels within 814~815 MHz	40 channels within 904~905 MHz
Receiving Method:	Double super heterodine	Double super heterodine
Transmitting Frequency:	40 channels within 904~905 MHz	40 channels within 814~815 MHz
Oscillation Method:	PLL synthesizer	PLL synthesizer
Detecting Method:	Quadrature Discriminator	Quadrature Discriminator
Tolerance of OSC Frequency:	±4.5 kHz	±4.5 kHz
Modulation Method:	F3 (frequency modulation)	F3 (frequency modulation)
ID Code:	20-bit written in ROM	20-bit written in ROM
Dial Mode:		Tone (DTMF)/Pulse
Redial:		Up to 30 digits
Save:		Up to 30 digits
Power Consumption:		20 hrs at Standby, 3 hrs at Talk
Dimension (H×W×D):	38×120×170 mm	150×57×34 mm
Weight:	400 g	280 g

Design and specifications are subject to change without notice.

DISASSEMBLY INSTRUCTIONS

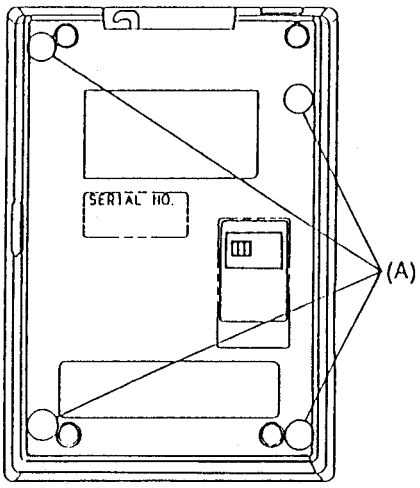

Fig. 5

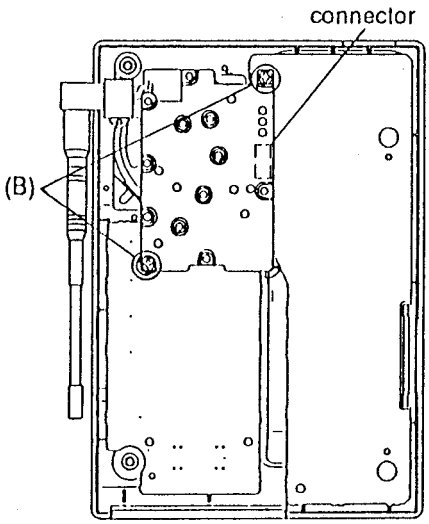

Fig. 6

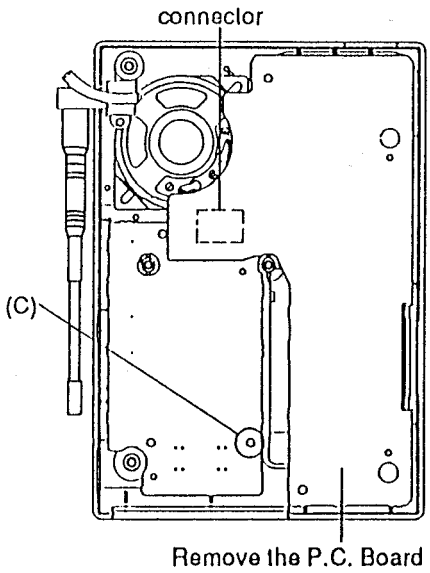

Fig. 7

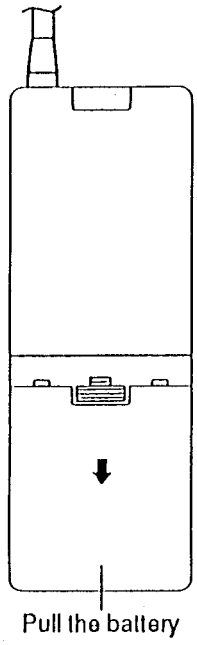

Fig. 8

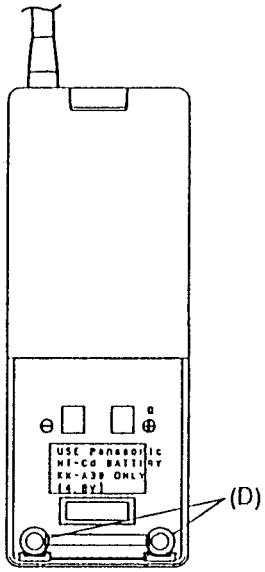

Fig. 9

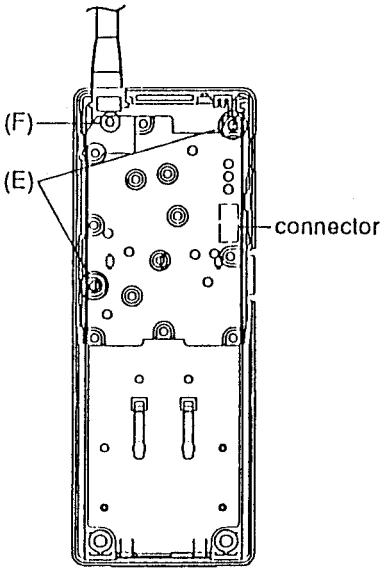

Fig. 10

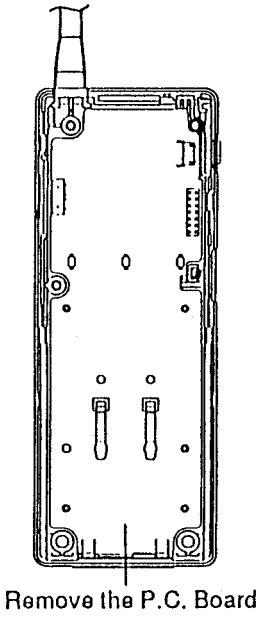

Fig. 11

Ref. No.	Procedure	Shown In Fig.-	To Remove-	Remove-
1	1	2	Lower Cabinet	Screws (3 X 16, 3 X 10).....(A) X 4
2	1,2	2		
3	1~3	3	RF Unit	Screws (2.6 X 20).....(B) X 2
4	1~4	3		Remove the connector
5	1~5	4	Main P.C. Board	Remove the connector
6	1~6	4		Screw (3 X 16).....(C) X 1
7	7	5	Cabinet Cover	Pull the battery
8	7,8	6		Screws (2.6 X 4).....(D) X 2
9	7~9	7	RF Unit	Screws (2.6 X 20).....(E) X 2
10	7~10	7		Screw (2.6 x 14).....(F) X 1
11	7~11	7		Remove the connector
12	7~12	8	Main P.C.Board	Remove the P.C.Board

CPU DATA (BASE UNIT)

IC1 MN170801KAV

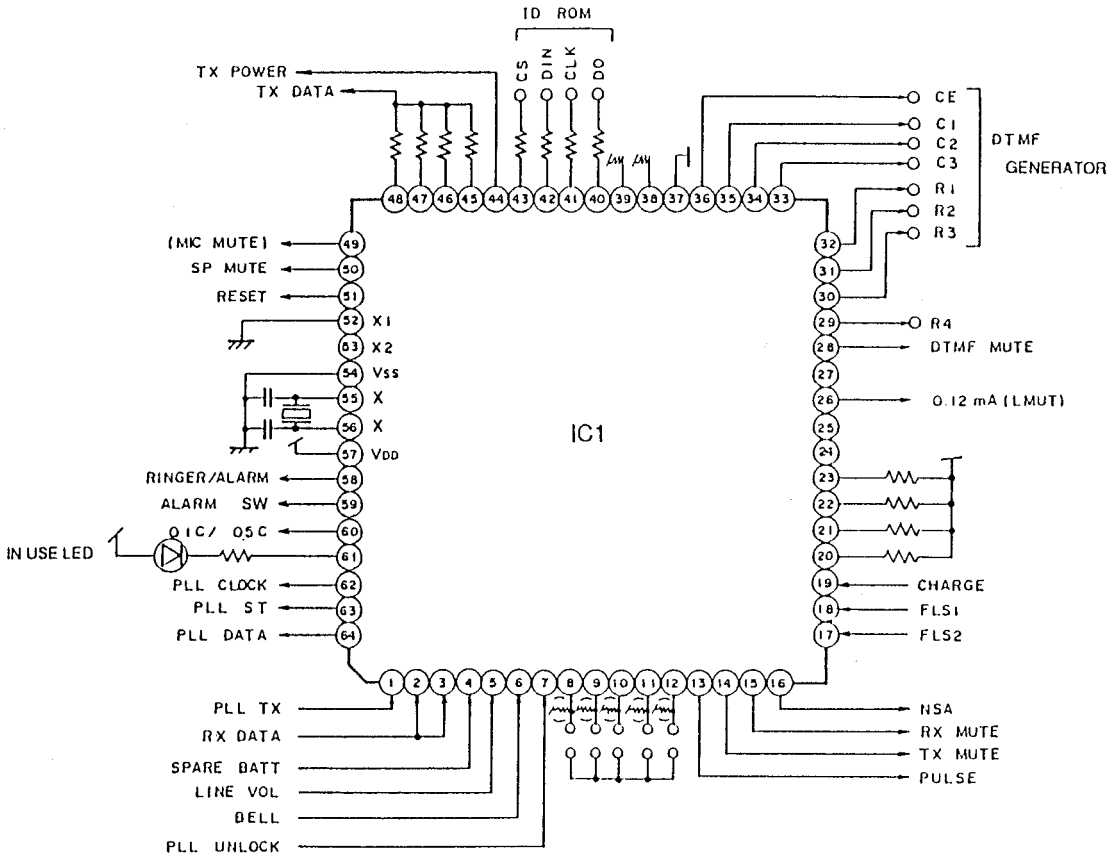

Fig. 12

CPU DATA (PORTABLE HANDSET)

IC1 MN170801KAU

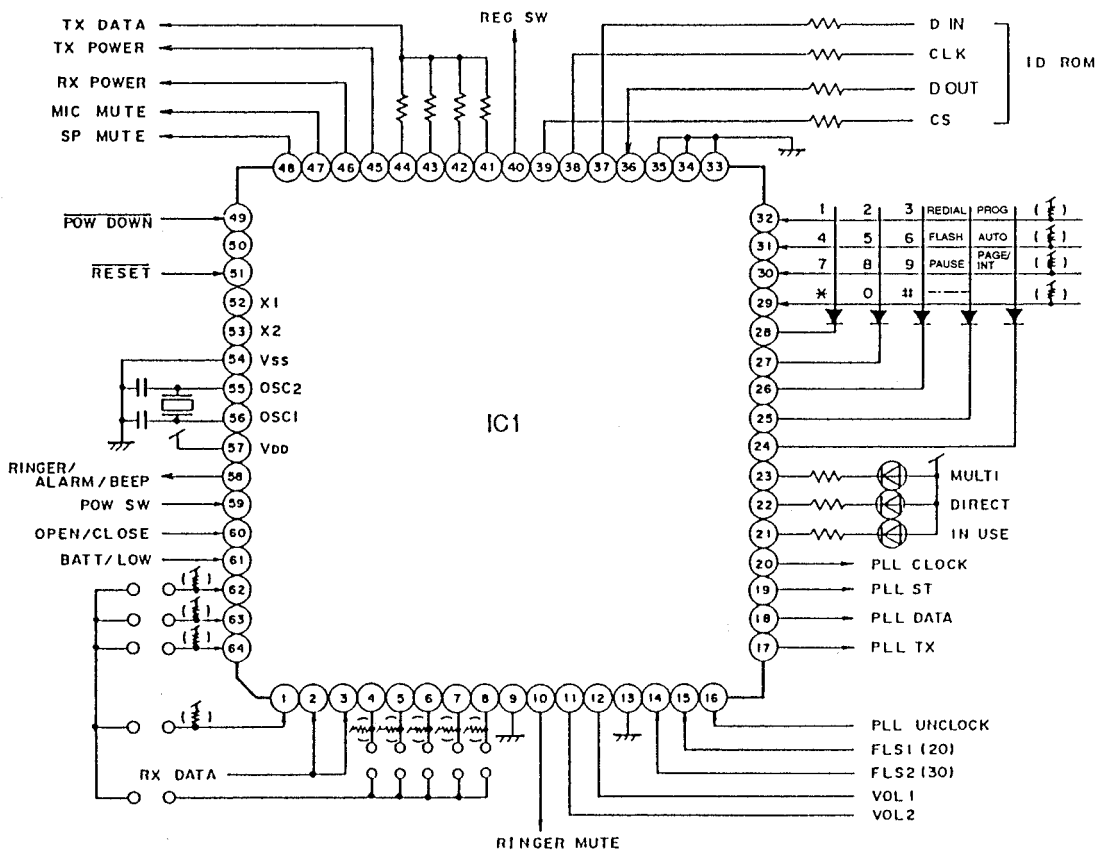

Fig. 13

ADJUSTMENTS (KX-T7980BXR)

After servicing the RF unit, never make adjustments without assembling the upper RF unit cover and the lower RF unit cover with screws.

Adjustment Preparations

1. Connect the main P.C. Board to RF unit by the extension cord (both base unit and portable handset).
2. Short TP2 and V_{SS} in the portable handset and short TP1, TP2 and V_{SS} in the base unit.
3. Connect a distortion meter (with AC voltmeter) to the telephone line output on the base unit and to the SPK terminals (TP3) on the portable handset.
4. Disconnect the points A and B of RF unit in the portable handset.
5. Connect 5 V to the battery terminals.
6. Press the PAUSE switch of portable handset to set the Talk of test mode.

If your unit have below symptom, adjust for each item as table of adjustment on page 12.

Symptom	Remedy
Does not link between base unit and portable handset.	Adjust the adjustment items (A), (B) and (F).
The sound quality is wrong.	Adjust the adjustment item (C).
The reception sensitivity is wrong.	Adjust the adjustment item (D).
Speaker level of portable handset is unstable.	Adjust the adjustment item (E).
Transmission sound for receiver is unstable.	Adjust the adjustment items (I).

Main P.C. Board of Base Unit

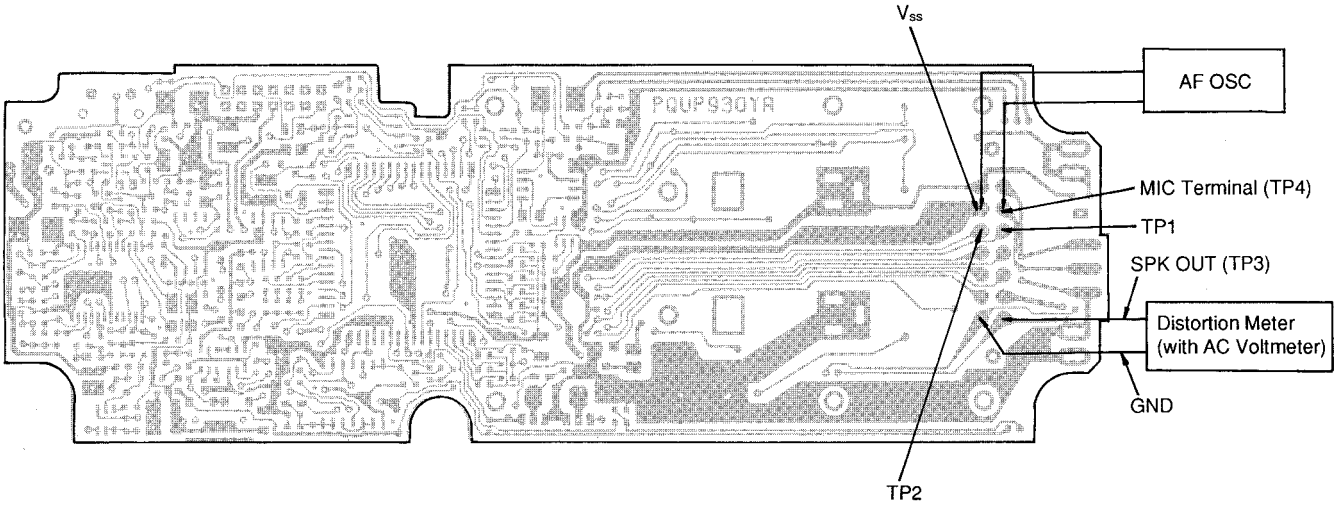

Fig. 14

Item	Adjustment Item	Procedure
(A)	RX VCO Voltage Adjustment	Place the voltmeter probe at TP5 and adjust the voltage to 1.5 V using VC301. **(When TP5 voltage is within 1.5 V±0.5 V, no need of adjusting.)**
(B)	TX VCO Voltage Adjustment	Place the voltmeter probe at TP6 and adjust the voltage to 1.2 V using VC302. **(When TP6 voltage is within 1.2 V±0.5 V, no need of adjusting.)**
(C)	Detective Coil Adjustment	Connect a signal generator (904.0125 MHz, 1 kHz modulation frequency, 3 kHz modulation, +60 dBμV emf output level) to the RF block section TP A. Adjust the AC voltmeter to the maximum level using L302.
(D)	Distortion Adjustment	Connect a signal generator (904.0125 MHz, 1 kHz modulation frequency, 3 kHz modulation, +60 dBμV emf output level) to the RF block section TP A. Adjust the distortion to the minimum using L301.
(E)	SP Output Adjustment	Connect a signal generator (904.0125 MHz, 1 kHz modulation frequency, 3 kHz modulation, +60 dBμV emf output level) to the RF block section TP A. Adjust VR305 so that the speaker output is −21 dBm (600Ω).
(F)	20 dB Electric Detective Adjustment	Set the signal generator so that the distortion and noise of speaker output is 28%~35%. Adjust VR302 so that CN1 pin 9 is set the point that iterate high and low (tolerance ±4 dB).
(G)	Max. Modulation	Connect a modulation meter and signal generator (904.0125 MHz, 60 dBμV, unmodulation) in TPA and GND. Connect an AF oscillator (f=1 kHz, −31 dBm level) to the MIC terminals (TP4) and V_{ss} on the portable handset. Adjust VR303 to set the modulation to 3.0 kHz.

Note: After this adjustment—
1. Disconnect TP2 and V_{ss}.
2. Connect the Test Point A and B.

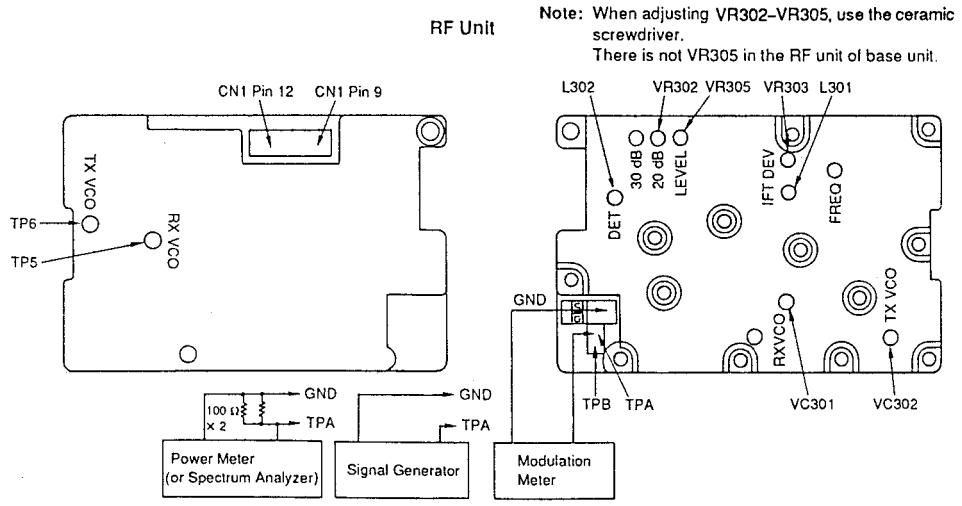

Fig. 15

ADJUSTMENTS (KX-T7980BXH)

After servicing the RF unit, never make adjustments without assembling the upper RF unit cover and the lower RF unit cover with screws.

Adjustment Preparations

1. Connect the main P.C. Board to RF unit by the extension cord (both base unit and portable handset).
2. Short TP2 and V_{SS} in the portable handset and short TP1, TP2 and V_{SS} in the base unit.
3. Connect a distortion meter (with AC voltmeter) to the telephone line output on the base unit and to the SPK terminals (TP3) on the portable handset.
4. Connect the AC adaptor to the AC jack of base unit.

If your unit have below symptom, adjust for each item as table of adjustment on page 15.

Symptom	Remedy
Does not link between base unit and portable handset.	Adjust the adjustment items (A), (B) and (F).
The sound quality is wrong.	Adjust the adjustment item (C).
The reception sensitivity is wrong.	Adjust the adjustment item (D).
Transmission sound for receiver is unstable.	Adjust the adjustment item (I).
Reception sound from transmission is unstable.	Adjust the adjustment item (J).

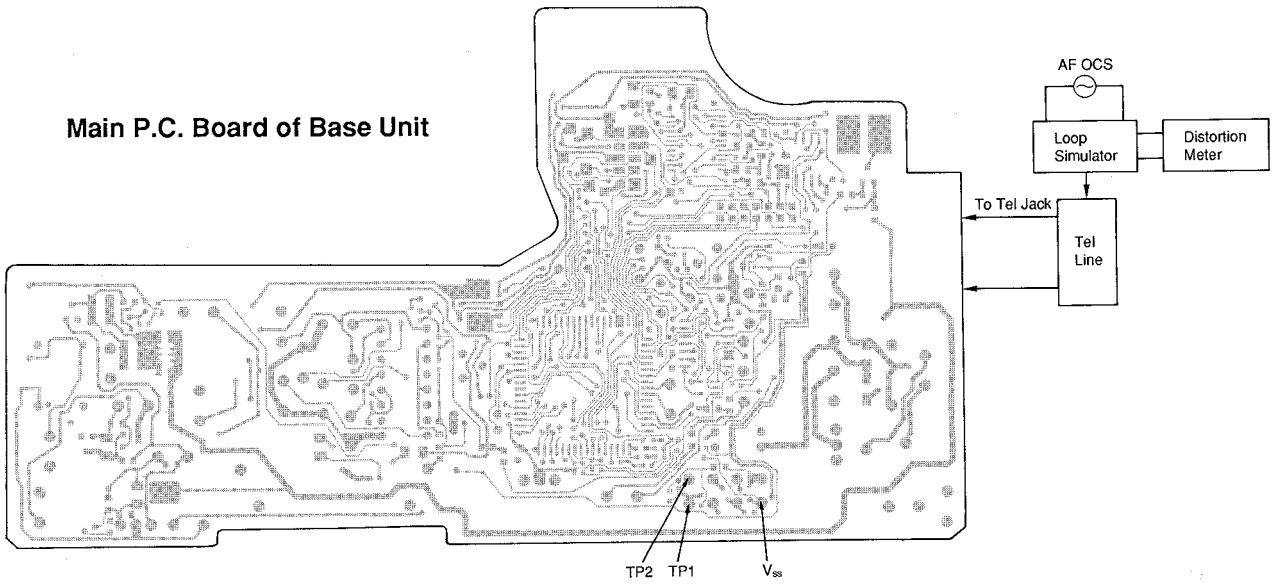

Item	Adjustment Item	Procedure
(A)	RX VCO Voltage Adjustment	Place the voltmeter probe at RF unit TP5 and adjust the voltage to 1.8 V using VC301. **(When TP5 voltage is within 1.8 V±0.5 V, no need of adjusting.)**
(B)	TX VCO Voltage Adjustment	Place the voltmeter probe at TP6 and adjust the voltage to 1.8 V using VC302. **(When TP6 voltage is within 1.8 V±0.5 V, no need of adjusting.)**
(C)	Detective Coil Adjustment	Connect the signal generator (814.0125 MHz, 1 kHz modulation frequency, 2 kHz modulation +20 dBμ emf output level) to the RF block section TP A and GND. Adjust the AC voltmeter to the maximum level using L302.
(D)	Distortion Adjustment	Connect the signal generator (814.0125 MHz, 1 kHz modulation frequency, 2 kHz modulation +20 dBμ emf output level) to the RF block section TP A and GND. Adjust the distortion to the minimum using L301.
(E)	20 dB Electric Detective Adjustment	Set the signal generator so that the distortion and noise of telephone line output is 28%~35%. Adjust VR302 so that CN1 pin 9 is set the point that iterate high and low (tolerance ±4 dB).
(F)	Max. Modulation	Connect a modulation meter and signal generator (814.0125 MHz, 60 dBμV, unmodulation) in TPA and GND. Connect the AF oscillator (f=1 kHz, +6 dBm) to the telephone line output. Adjust VR303 to set the modulation to +4.5 kHz.
(G)	RX Adjustment	Apply a signal (f=1 kHz, −12 dBm) to the telephone line output by the AF oscillator. Adjust R86 to set the modulation to 3 kHz.

Note: After this adjustment, disconnect TP1, TP2 and V_{SS}.

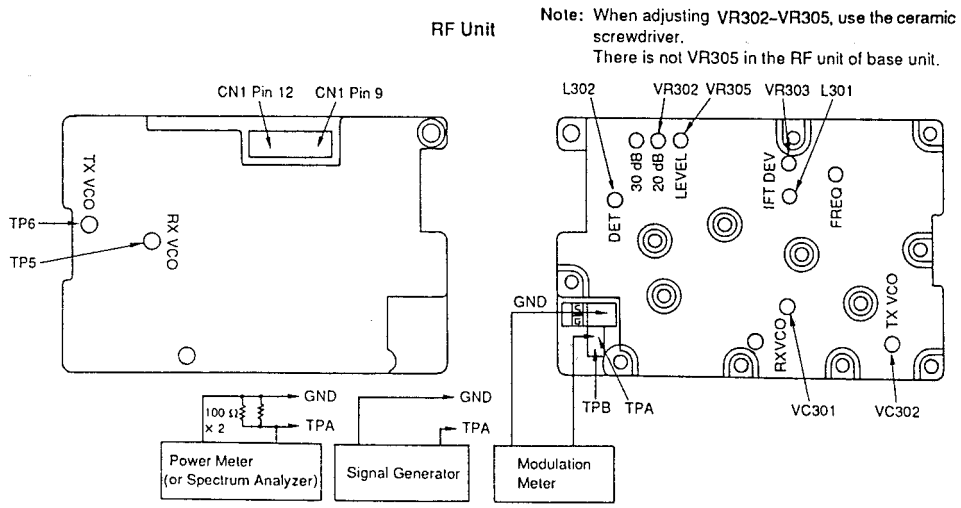

Fig. 17

BASE UNIT RX
PORTABLE HANDSET TX

CH		CH		CH		CH	
1	814.0125	11	814.2625	21	814.5125	31	814.7625
2	814.0375	12	814.2875	22	814.5375	32	814.7875
3	814.0625	13	814.3125	23	814.5625	33	814.8125
4	814.0875	14	814.3375	24	814.5875	34	814.8375
5	814.1125	15	814.3625	25	814.6125	35	814.8625
6	814.1375	16	814.3875	26	814.6325	36	814.8875
7	814.1625	17	814.4125	27	814.6625	37	814.9125
8	814.1875	18	814.4375	28	814.6875	38	814.9375
9	814.2125	19	814.4625	29	814.7125	39	814.9625
10	814.2375	20	814.4875	30	814.7375	40	814.9875

BASE UNIT TX
PORTABLE HANDSET RX

CH				CH			
1	904.0125	11	904.2625	21	904.5125	31	904.7625
2	904.0375	12	904.2875	22	904.5375	32	904.7875
3	904.0625	13	904.3125	23	904.5625	33	904.8125
4	904.0875	14	904.3375	24	904.5875	34	904.8375
5	904.1125	15	904.3625	25	904.6125	35	904.8625
6	904.1375	16	904.3875	26	904.6325	36	904.8875
7	904.1625	17	904.4125	27	904.6625	37	904.9125
8	904.1875	18	904.4375	28	904.6875	38	904.9375
9	904.2125	19	904.4625	29	904.7125	39	904.9625
10	904.2375	20	904.4875	30	904.7375	40	904.9875

IC1

Mode \ Pin	1	2	3	4	5	6	7	8	9	10	11	12	13	14	15	16	17	18	19	20	21	22	23	24	25	26	27	28	29	30	31	32	33	34	35	36	37	38	39	40	41	42
Standby	5.2	2.3	2.3	4.4	0	5.2	4.2	5.2	5.2	5.2	5.2	5.2	0	5.2	0	0	5.0	5.0	5.2	5.3	5.2	5.2	5.2	0	0	0	0	0	5.2	5.2	5.2	5.2	5.2	5.2	5.2	0	0	5.2	5.2	5.2	0	0
Talk	0	2.3	2.3	4.4	0	5.2	0	5.1	5.1	5.1	5.1	5.1	5.1	0	5.1	0	0	0	5.2	5.3	5.1	5.2	5.1	0	0	5.1	0	0	5.1	5.1	5.1	5.1	5.1	5.1	5.1	0	0	5.1	5.1	5.1	0	0

IC6

Mode \ Pin	1	2	3	4	5	6	7	8
Standby	3.0	3.0	3.0	0	3.0	3.0	3.0	6.0
Talk	3.0	3.0	3.0	0	3.0	3.0	3.0	6.0

IC8

Mode \ Pin	1	2	3	4	5	6	7	8	9	10	11	12	13	14	15	16	17	18
Standby	6.0	6.0	0	5.2	5.2	5.2	0	0	6.0	5.9	1.8	5.2	5.2	5.2	5.2	6.0	1.8	0
Talk	5.9	5.9	0	5.1	5.1	5.1	0	0	5.9	5.9	1.8	5.1	5.1	5.1	5.1	5.9	1.7	0

IC9

Mode \ Pin	1	2	3	4	5	6	7	8
Standby	0	4.9	0	0	0	5.2	0	4.9
Talk	0	4.9	0	0	0	5.1	0	4.9

Mode \ Pin	1	2
Standby	2.3	2.3
Talk	2.3	0

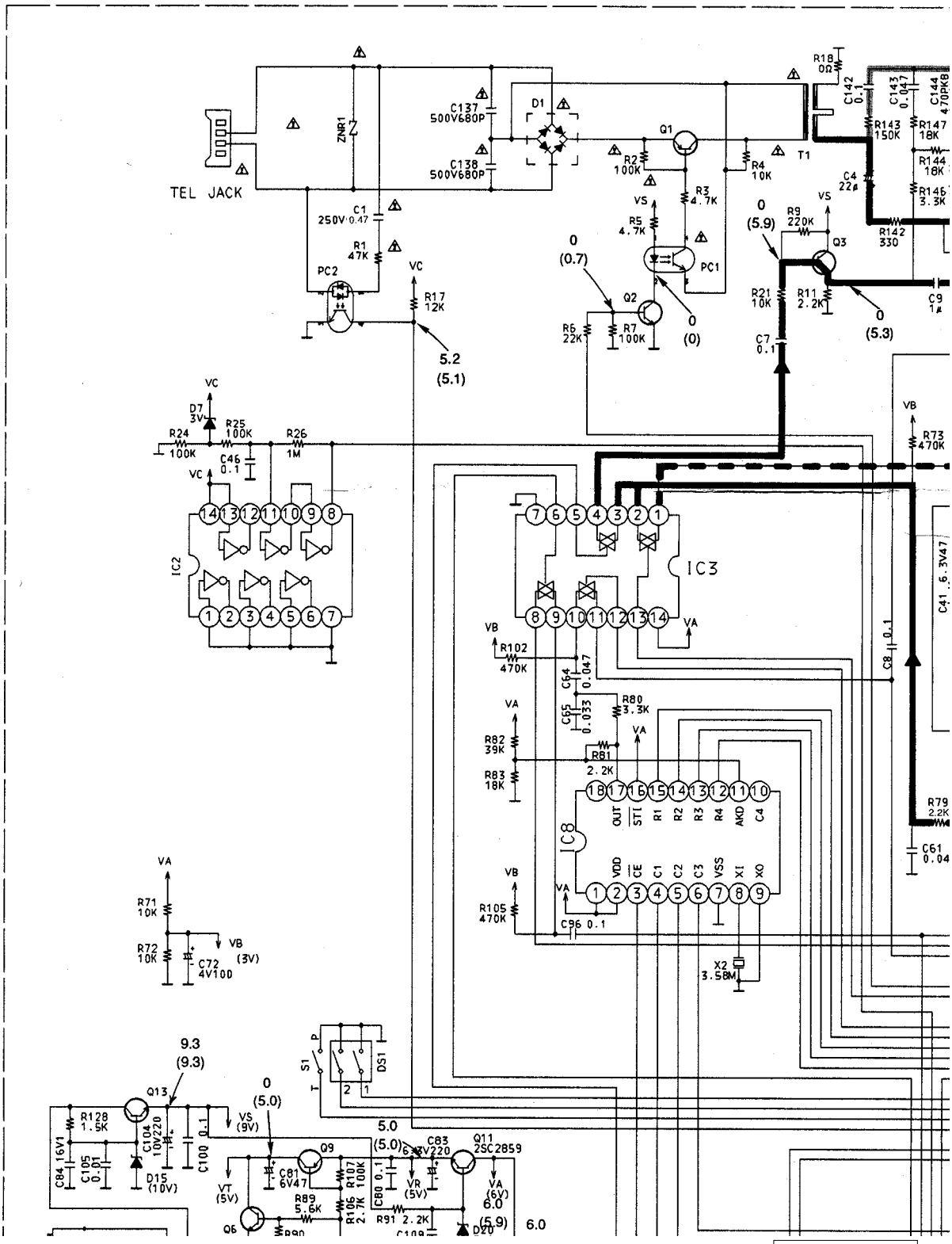

SCHEMATIC DIAGRAM (KX-T7980BXH)

Pin	41	42	43	44	45	46	47	48	49	50	51	52	53	54	55	56	57	58	59	60	61	62	63	64
Mode																								
Standby	0	0	0	0	0	0	0	5.1	0	0	5.2	0	5.2	0	2.7	2.3	5.2	5.2	0	5.1	5.2	5.0	0	5.0
Talk	0	0	0	0	0	0	0	5.1	0	0	5.2	0	5.1	0	2.7	2.3	5.2	5.1	0	5.1	0.4	5.2	5.1	5.1

IC2

Pin	1	2	3	4	5	6	7	8	9	10	11	12	13	14
Mode														
Standby	0	5.2	0	5.2	0	5.2	0	5.2	0	0	3.8	0	5.2	5.2
Talk	0	5.2	0	5.2	0	5.2	0	5.2	0	0	3.8	0	5.2	5.2

IC4

Pin	1	2	3	4	5	6	7	8	9	10	11	12	13	14
Mode														
Standby	0	2.6	0.8	0	0	0.6	0	2.9	5.6	5.9	5.8	4.8	1.4	1.4
Talk	0	2.6	0	0	0	0.6	0	2.9	5.6	5.8	5.8	4.8	1.4	1.4

IC10

Pin	1	2	3	4	5	6	7	8
Mode								
Standby	2.3	2.3	2.3	0	2.3	2.3	2.3	6.0
Talk	2.3	0	2.2	0	2.3	2.3	2.3	5.9

IC14

Pin	1	2	3	4	5	6	7	8
Mode								
Standby	4.7	4.7	4.6	0	4.6	4.7	4.7	9.4
Talk	4.7	4.7	4.6	0	4.6	4.7	4.7	9.3

IC301

Pin	1	2	3	4	5	6	7	8	9	10	11	12	13	14	15	16
Mode																
Standby	4.5	4.1	4.5	4.5	4.1	0	4.1	4.5	1.7	0.8	2.6	1.4	0	0	0	1.8
Talk	4.4	4.0	4.3	4.5	4.1	4.1	4.1	4.5	1.7	0.8	2.5	0	0	0	0	0

IC302

Pin	1	2	3	4	5	6	7	8
Mode								
Standby	4.9	0.7	1.4	0	0.6	0.6	0	5.0
Talk	0	0.7	0	0	0.6	0.6	0	5.0

IC4

Pin	1	2	3	4	5	6	7
Mode							
Standby	5.0	5.0	0	0	0	4.6	0.5
Talk	5.1	5.2	5.1	2.3	2.3	0	2.1

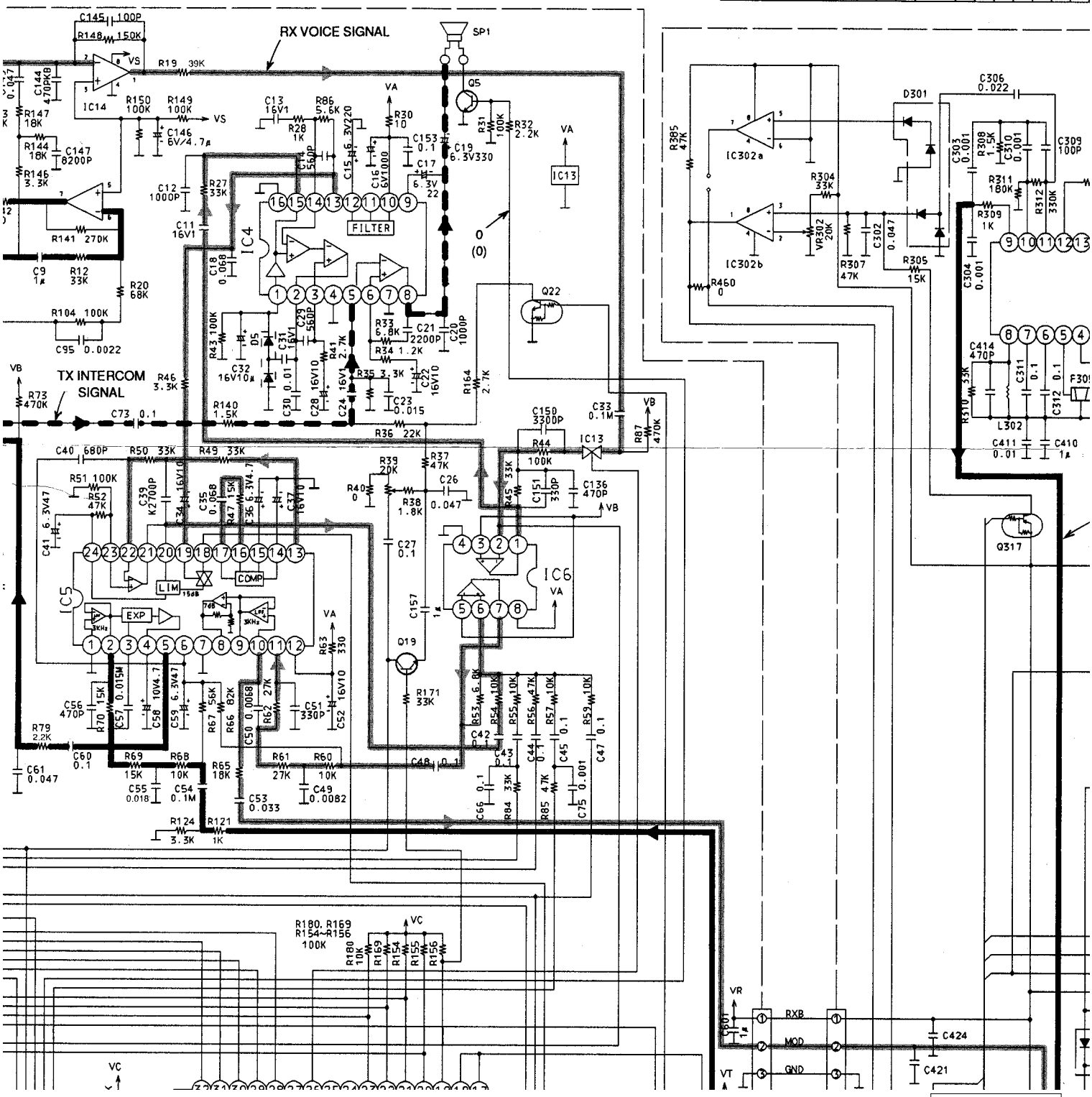

13 | 14 | 15 | 16 | 17 | 18 | 19

							IC5																							
10	11	12	13	14	15	16	Pin / Mode	1	2	3	4	5	6	7	8	9	10	11	12	13	14	15	16	17	18	19	20	21	22	23	24
5.9	5.8	4.8	1.4	1.4	1.4	0	Standby	0	1.6	1.6	1.2	1.6	1.6	0	0	1.8	1.6	1.6	5.1	1.6	1.6	0.5	1.6	0	0	1.6	1.6	1.6	1.6	2.3	3.2
5.8	5.8	4.8	1.4	1.4	1.4	0	Talk	0	1.6	1.6	0.6	1.6	1.6	0	0	1.8	1.6	1.6	5.0	1.6	1.6	0.7	1.6	1.6	0	1.6	1.6	1.6	1.6	2.3	3.4

IC303																				IC304								CN301													
3	4	5	6	7	8	9	10	11	12	13	14	15	16	17	18	19	20	Pin / Mode	1	2	3	4	5	6	7	8	Pin / Mode	1	2	3	4	5	6	7	8	9	10	11	12	13	14
0	0	0	4.6	0.5	0.5	0	0	5.0	0	0	0	0	2.4	2.4	1.8	1.2	4.8	Standby	2.3	2.3	2.2	0	0	0	0	0	Standby	5.0	0	0	5.0	0	5.0	5.9	2.2	4.9	2.2	5.0	0	4.1	0
.1	2.3	2.3	0	2.1	2.1	0	0	5.0	1.7	2.0	2.0	0	2.4	2.4	1.7	0	4.6	Talk	2.2	2.2	2.2	0	2.2	2.3	2.3	5.0	Talk	5.0	0	0	5.0	5.1	5.1	5.9	2.2	0	2.2	5.2	0	0	0

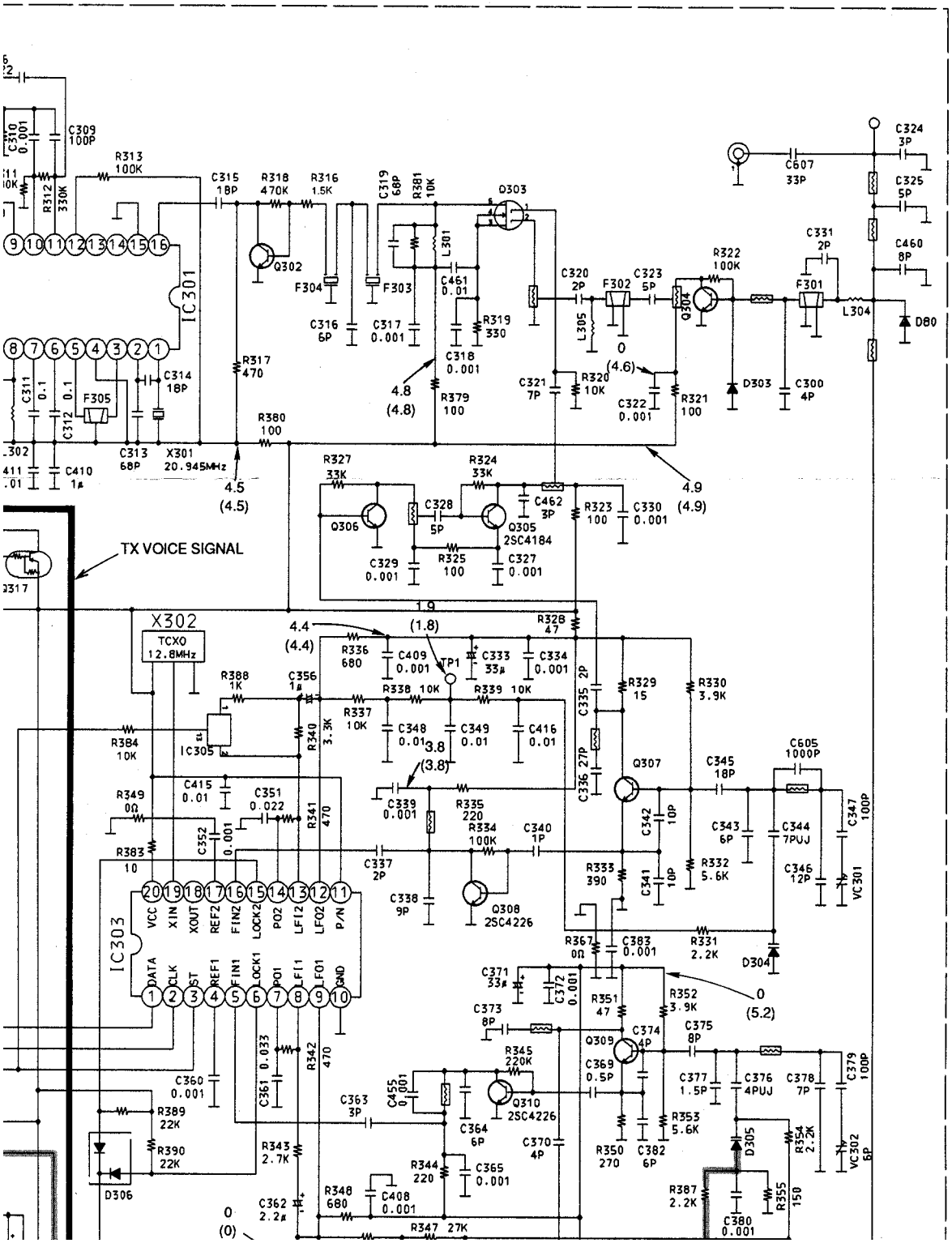

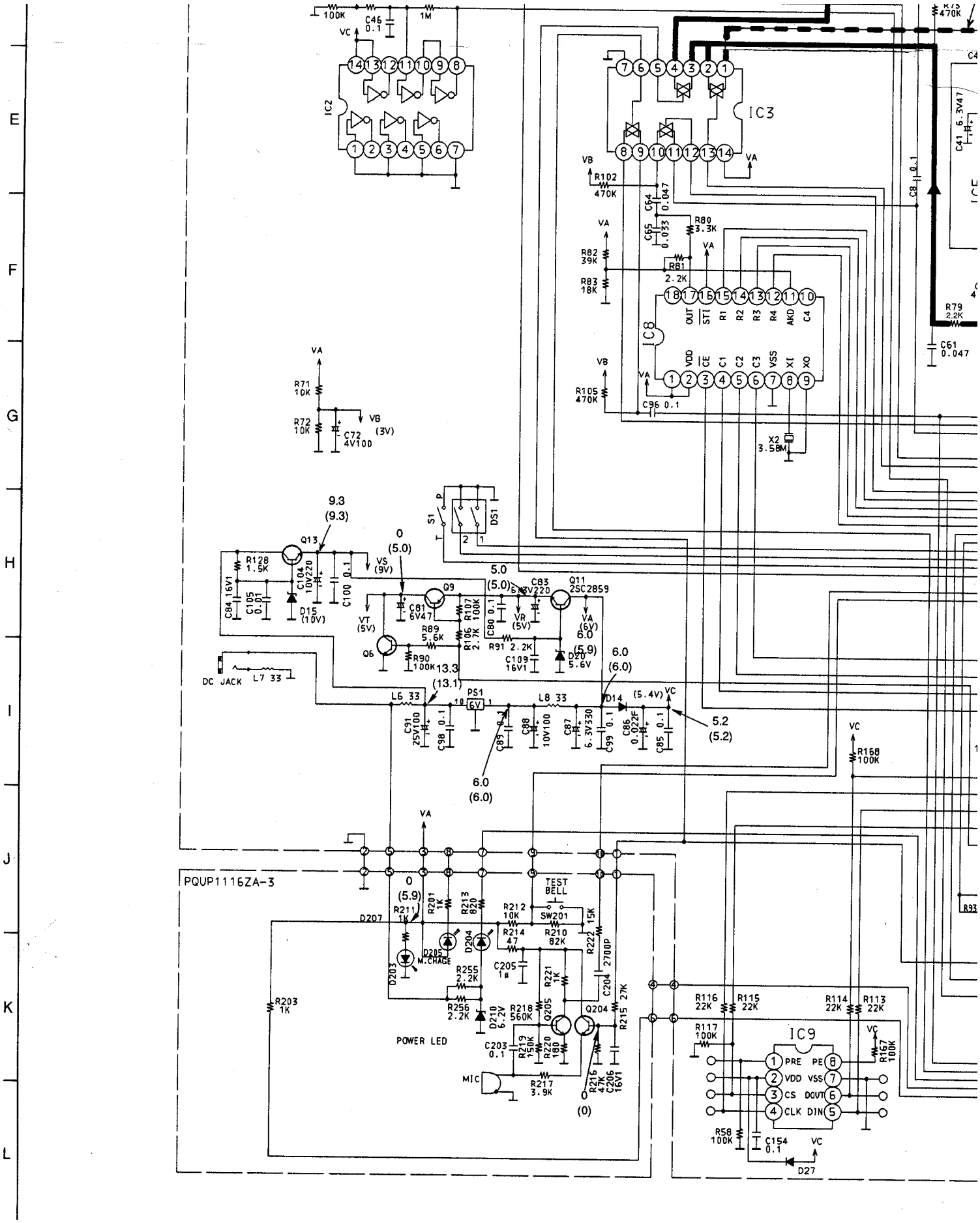
PQUP1116ZA-3
IC2
IC3
IC8
IC9
Q13
Q9
Q11
2SC2859
Q6
Q204
Q205
DC JACK
L7 33
L6 33
L8 33
PS1
6V
S1
DS1
TEST BELL
SW201
POWER LED
MIC
M.CHAGE
D27
X2
3.58M
VA
VB
VC
VS (9V)
VT (5V)
VR (5V)
VA (6V)
(3V)
(5.4V)
(13.1)
(5.9)
(5.0)
(6.0)
(0)
9.3
(9.3)
0
5.0
6.0
13.3
5.2
(5.2)
OUT
STI
R1
R2
R3
R4
AKD
C4
VDD
CE
C1
C2
C3
VSS
XI
XO
PRE
PE
VDD
VSS
CS
DOUT
CLK
DIN

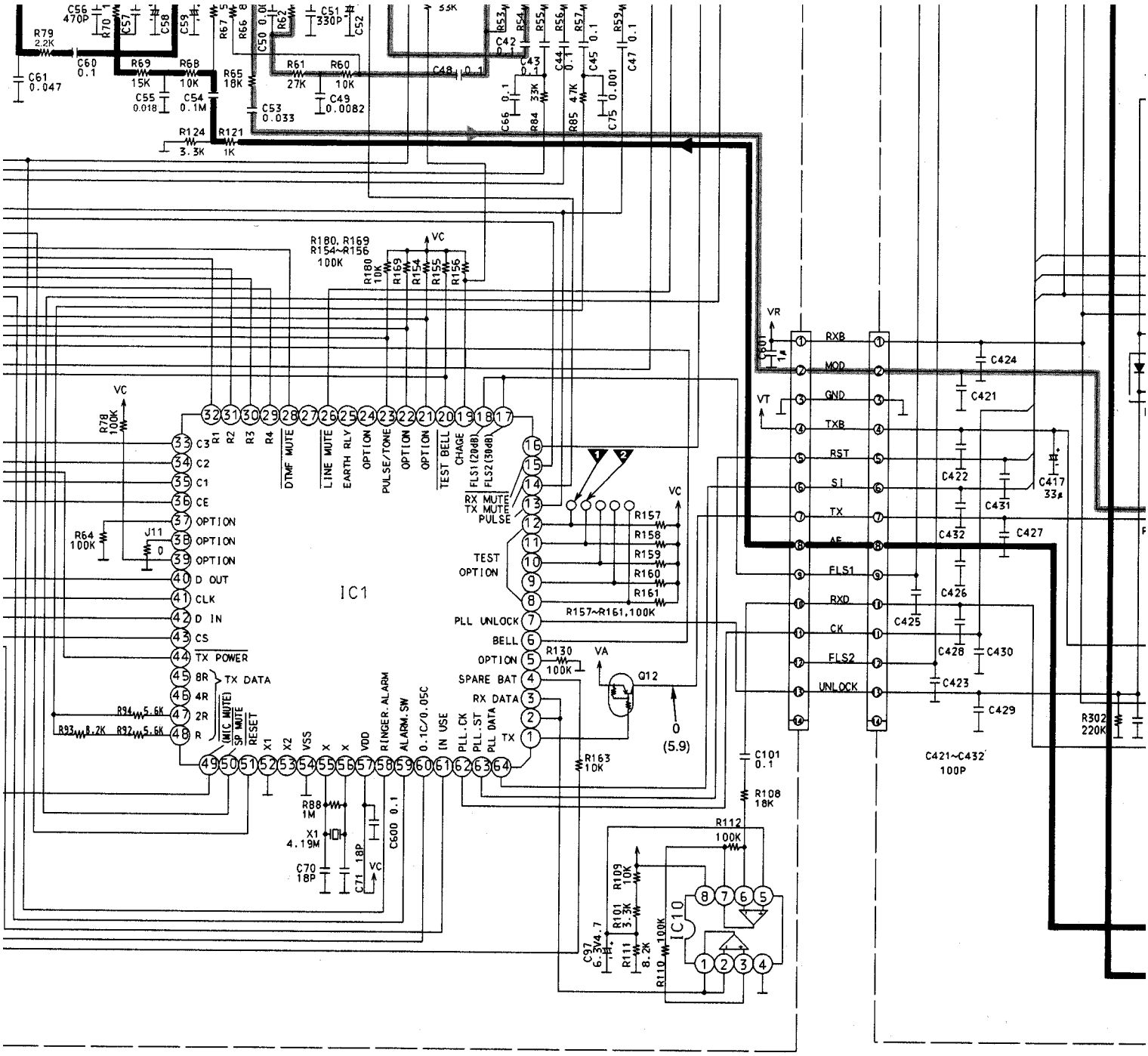

odified at any time
ology.

Important Safety Notice

The shaded area on this schematic diagram incorporates special features important for protection from fire and electrical shock hazards.
When servicing, it is essential that only manufacturer's specified parts be used for the critical components in the shaded areas of schematic.

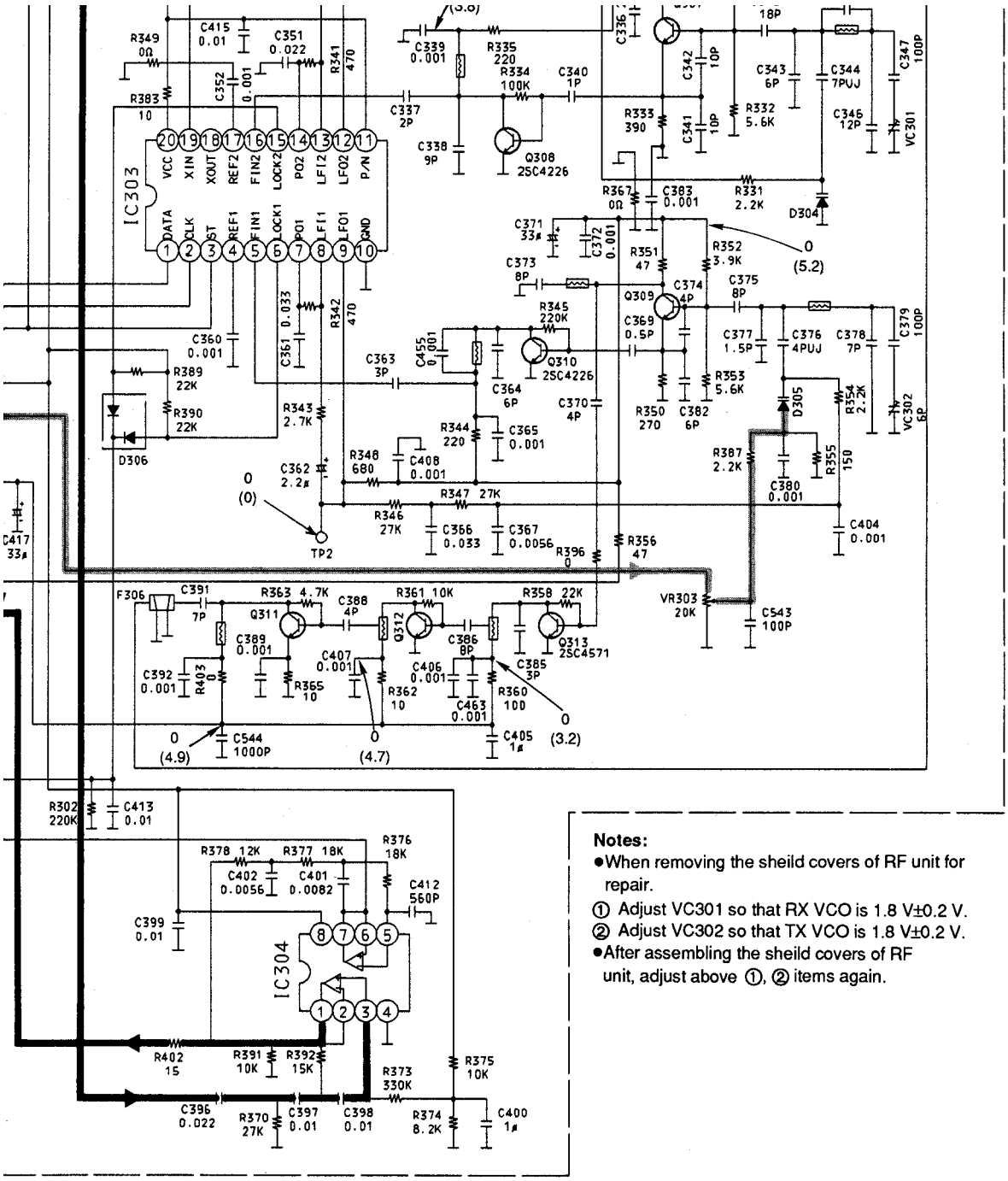

Notes:

- When removing the sheild covers of RF unit for repair.

① Adjust VC301 so that RX VCO is 1.8 V±0.2 V.

② Adjust VC302 so that TX VCO is 1.8 V±0.2 V.

- After assembling the sheild covers of RF unit, adjust above ①, ② items again.

IC2														
Mode \ Pin	1	2	3	4	5	6	7	8	9	10	11	12	13	14
Standby	0	0	4.1	4.1	0	0	0	3.5	3.5	0	4.1	0	0	4.1
Talk	0	0	4.2	4.2	0	0	0	3.5	3.5	0	4.2	0	0	4.2

IC4								
Mode \ Pin	1	2	3	4	5	6	7	8
Standby	1.0	1.0	0	0	0	0	0	0
Talk	1.5	1.5	1.5	0	1.5	0	1.5	4.0

IC6			
Mode \ Pin	1	2	3
Standby	0	5.2	4.5
Talk	0	5.2	4.5

Mode \ Pin	1	2	3
Standby	0	0	0
Talk	0	1.6	1.6

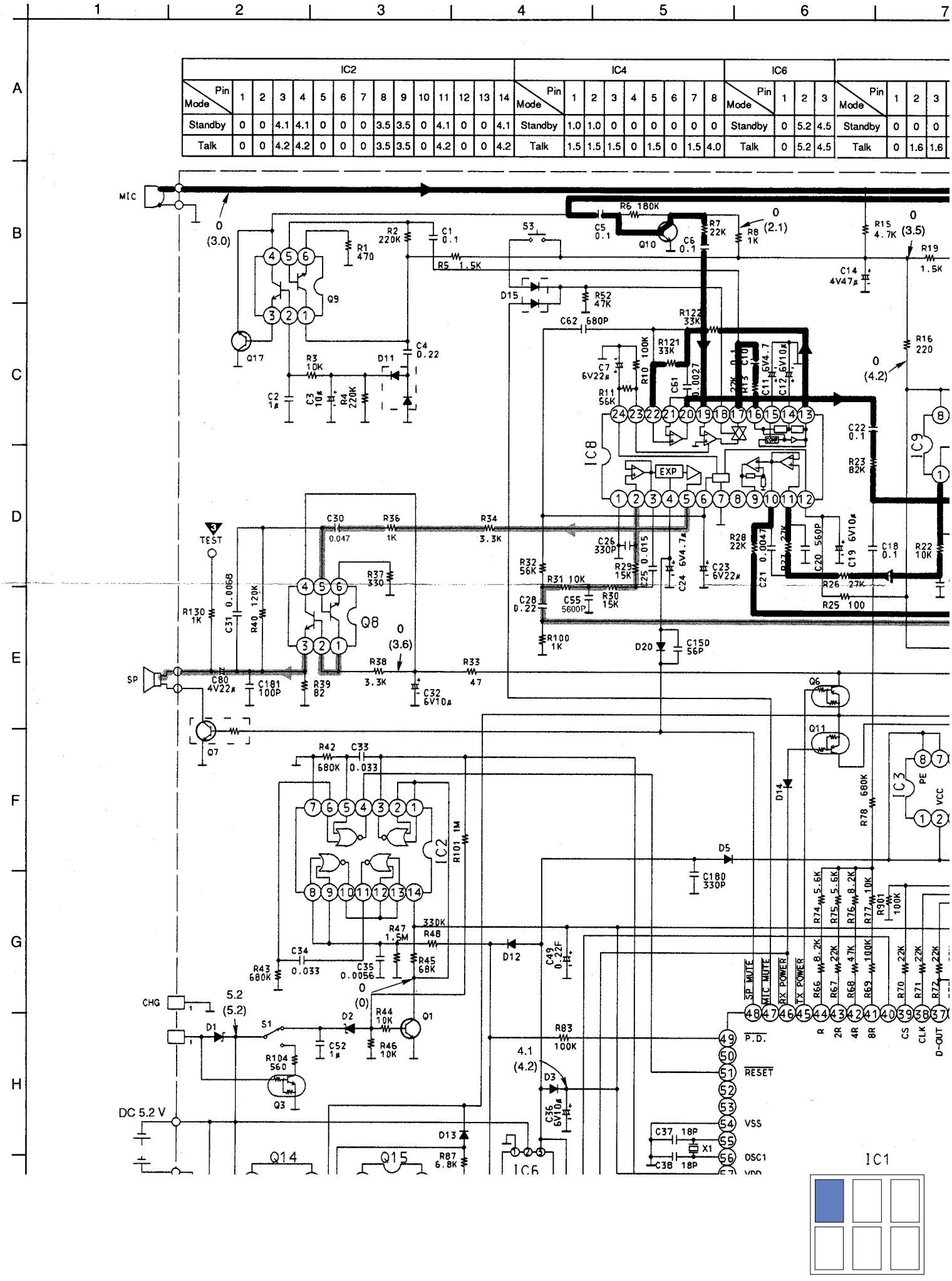

SCHEMATIC DIAGRAM (KX-T7980BXR)

7 | 8 | 9 | 10 | 11 | 12 | 13

IC8																								
Pin / Mode	1	2	3	4	5	6	7	8	9	10	11	12	13	14	15	16	17	18	19	20	21	22	23	24
Standby	0	0	0	0	0	0	0	0	0.25	0	0	0	0.25			0	0	0	0	0	0	0	0	0
Talk	0	1.6	1.6	1.2	1.6	1.6	0	0	2.4	1.8	1.8	0.4	1.6	1.6	0	1.6	0	0	1.6	1.6	1.6	1.6	2.1	3.4

IC9							
Pin / Mode	1	2	3	4	5	6	7	8
Standby	0	0	0	0	0	0	0	0
Talk	1.9	1.9	1.9	0	1.1	1.1	3.0	4.2

IC10								
Pin / Mode	1	2	3	4	5	6	7	8
Standby	0	0	0	0	0.3	0	0	0.2
Talk	0.3	0	0	0	0.3	0.3	0	0

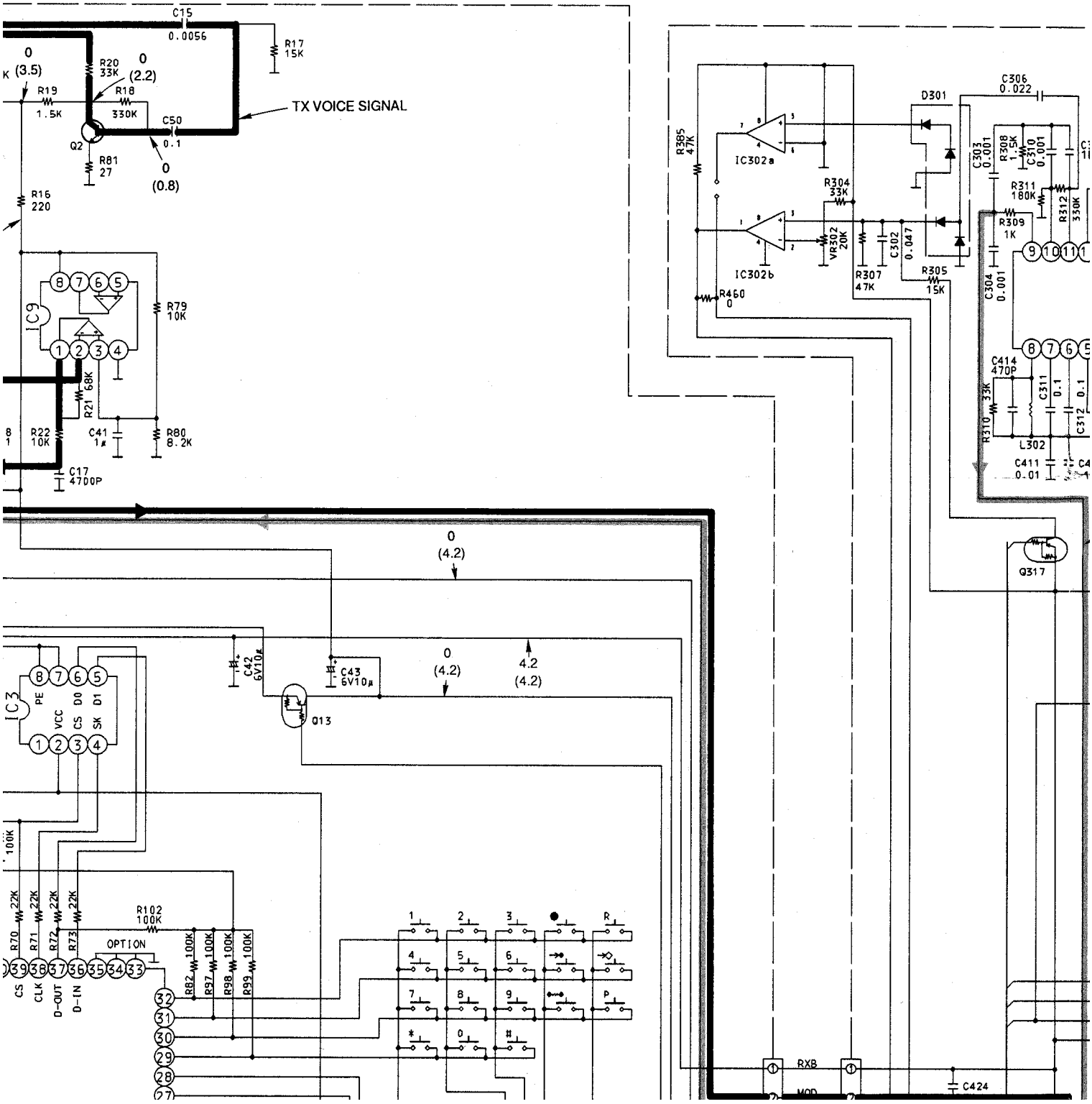

13	14	15	16	17	18	19

		IC301																IC302								Q8					
7	8	Mode \ Pin	1	2	3	4	5	6	7	8	9	10	11	12	13	14	15	16	Mode \ Pin	1	2	3	4	5	6	7	8	Mode \ Pin	1	2	3	4	5	6
0	0.2	Standby	3.6	3.1	3.6	3.7	3.3	3.3	3.3	3.7	1.4	0.8	2.6	1.3	0	0.7	0	1.8	Standby	4.1	0.6	1.0	0	0	1.1	3.7	0	Standby	0	0	0	0	0	0
0	0	Talk	3.6	3.0	3.6	3.6	3.3	3.3	3.3	3.6	1.4	0.8	2.6	1.3	0	0.8	0	1.8	Talk	4.1	0.6	1.0	0	0	1.1	3.7	4.1	Talk	1.6	1.6	1.0	3.6	0.8	0

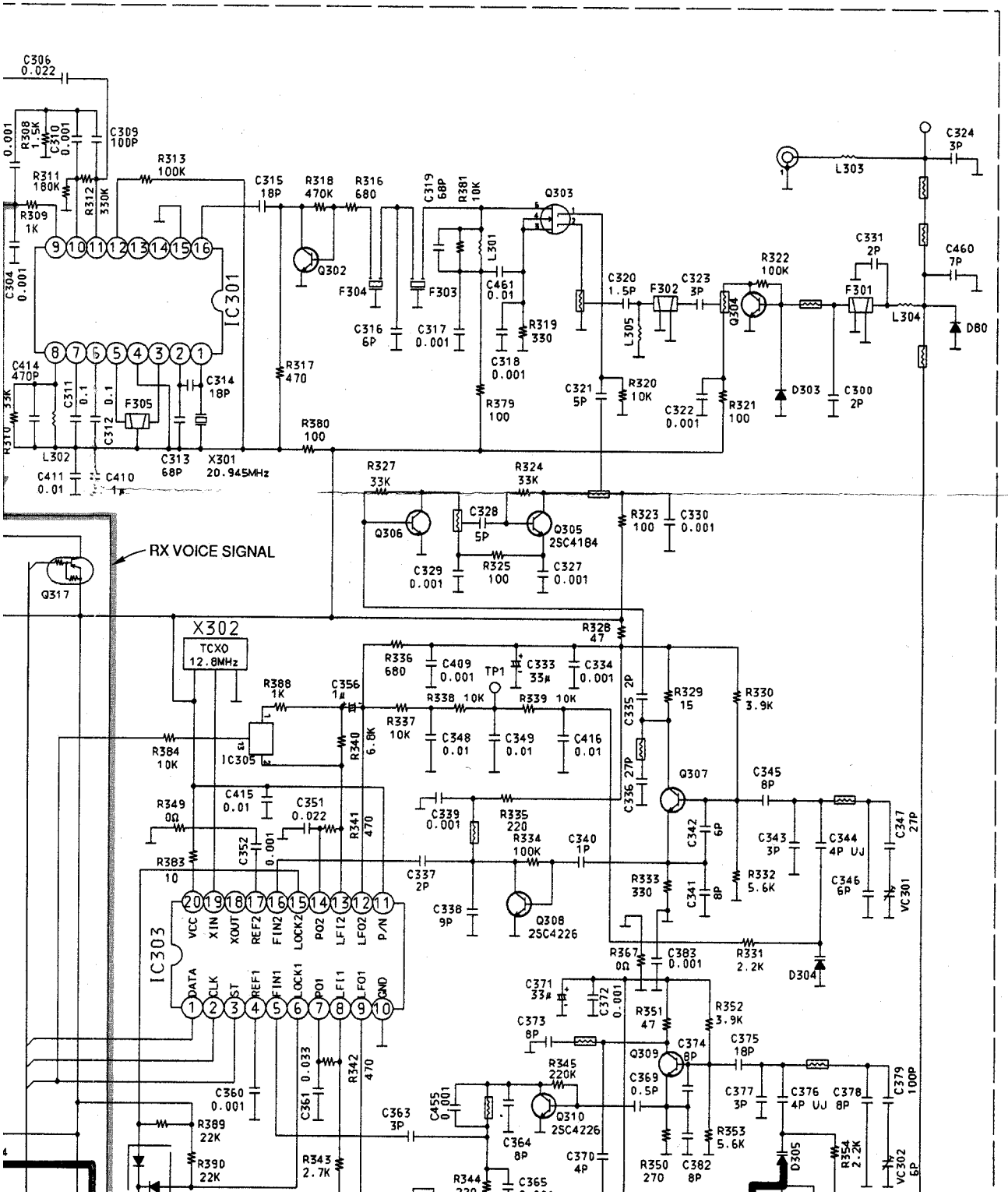

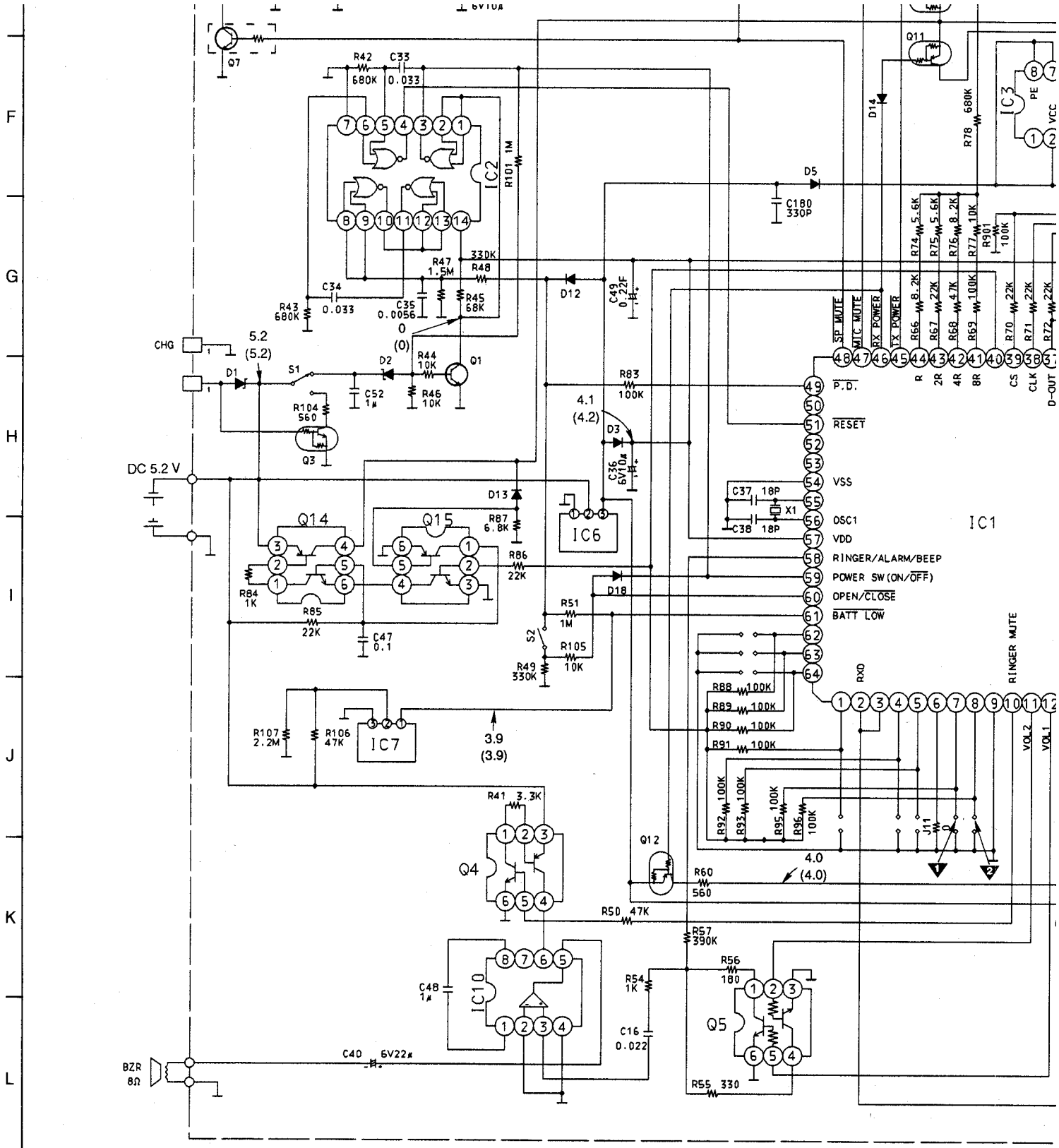

Notes: 1. S1: Power/Ringer Switch
2. S2: Open/Close detect switch
3. S3: Mute Power Switch

DC voltage measurements are taken with an electronic voltmeter from the negative voltage line.
STAND BY position. ( ): Talk position.

This schematic
with the develo

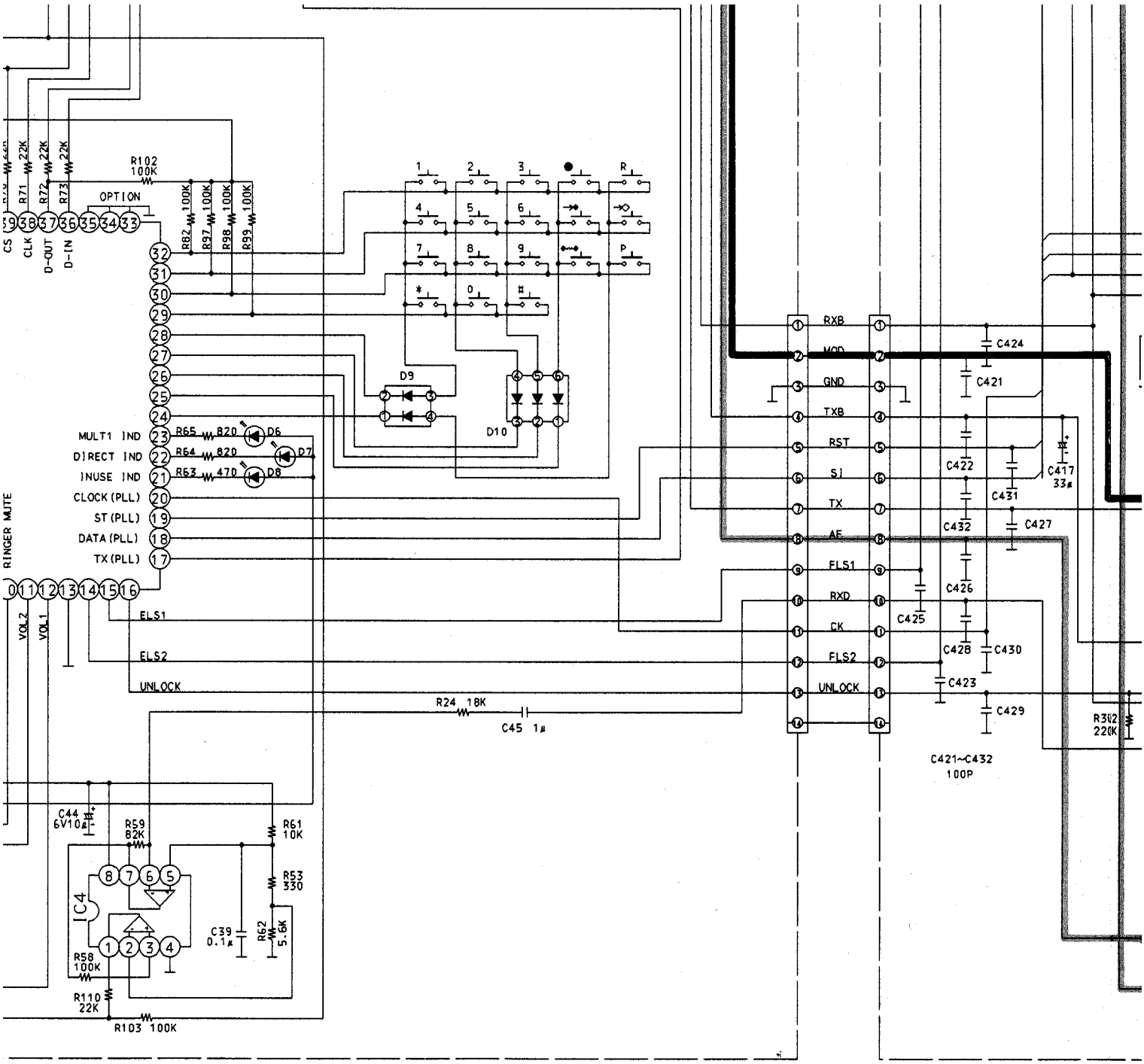

ematic diagram may be modified at any time
development of new technology.

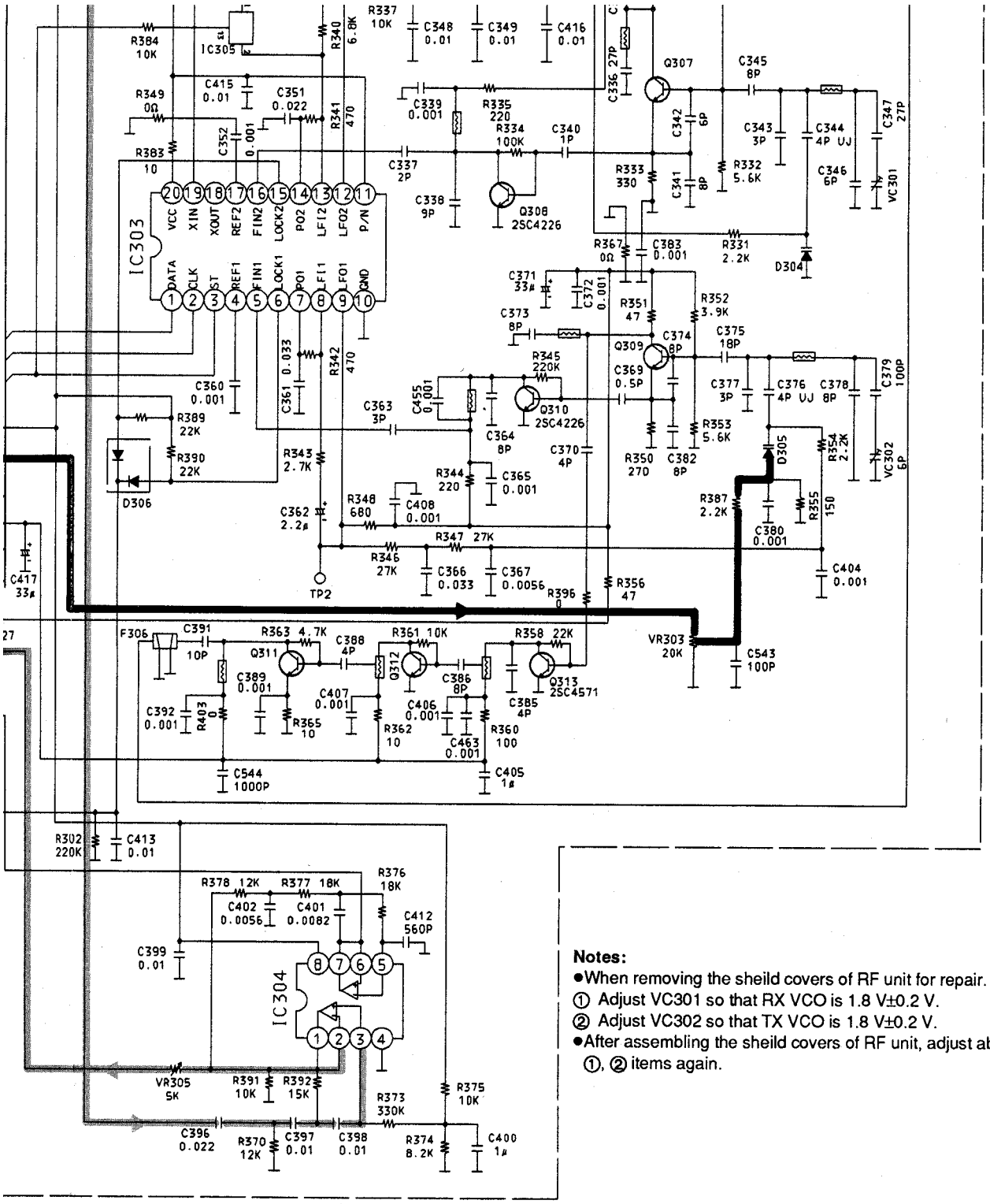

Notes:

- When removing the sheild covers of RF unit for repair.
  ① Adjust VC301 so that RX VCO is 1.8 V±0.2 V.
  ② Adjust VC302 so that TX VCO is 1.8 V±0.2 V.
- After assembling the sheild covers of RF unit, adjust above ①, ② items again.

BLOCK DIAGRAM (BASE UNIT)
(Main P.C. Board)

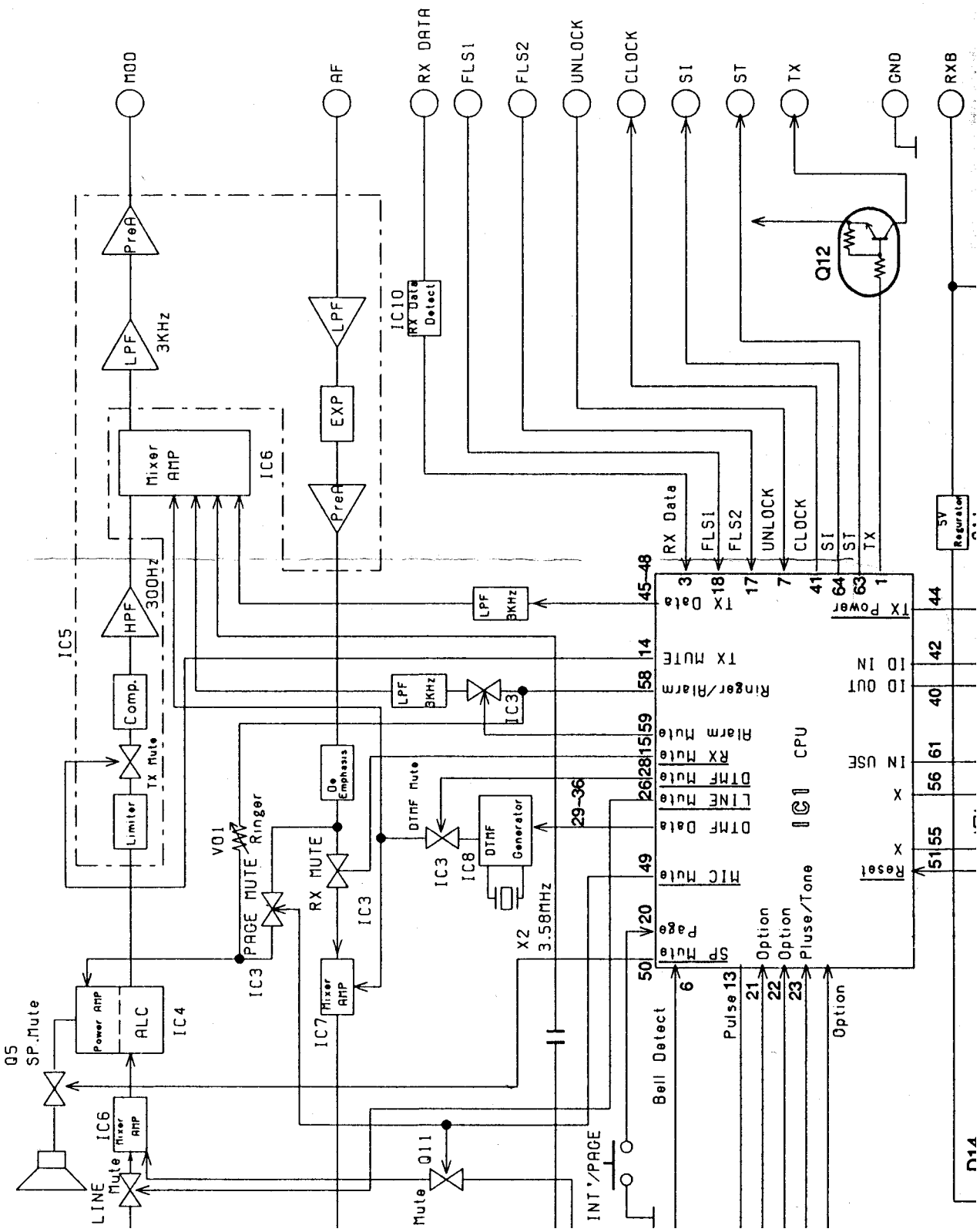

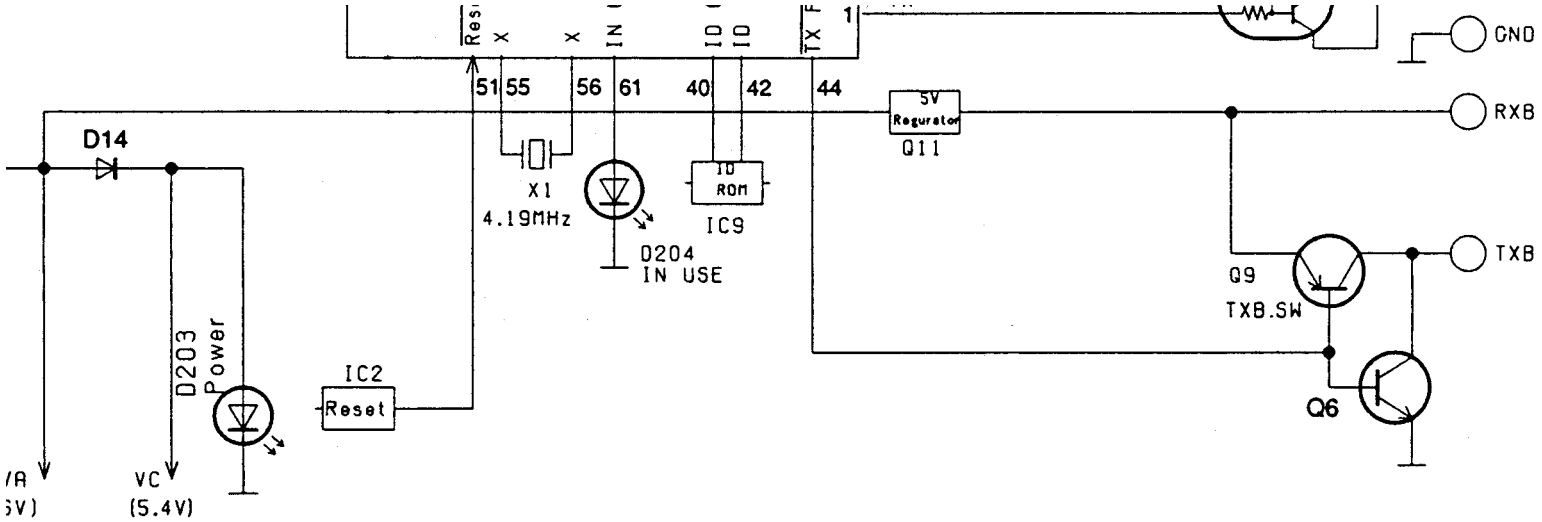
GND
RXB
TXB
51
55
56
61
40
42
44
1
5V Regulator
Q11
D14
X1
4.19MHz
ID ROM
IC9
D204
IN USE
Q9
TXB.SW
Q6
D203
Power
IC2
Reset
VC
(5.4V)

Fig. 18

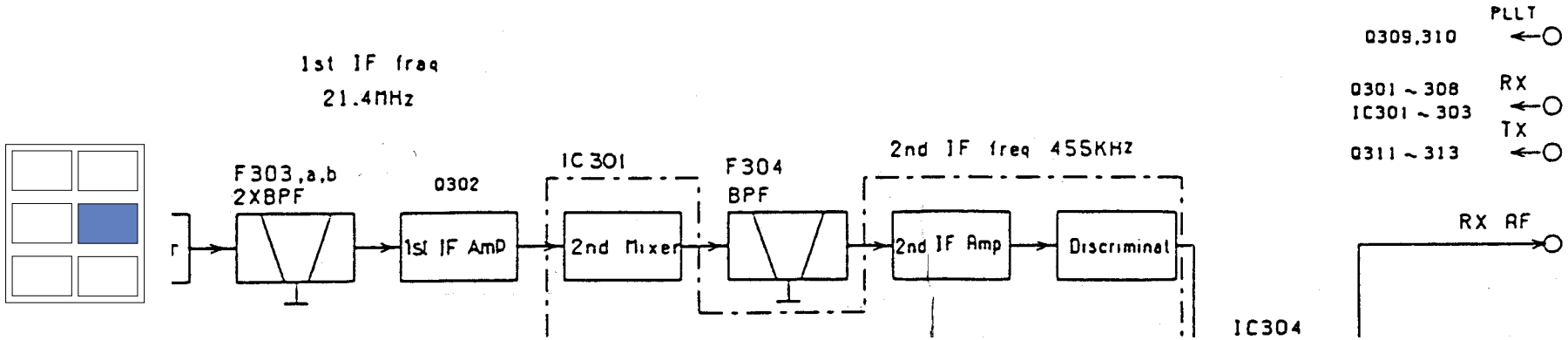
1st IF freq
21.4MHz
F303,a,b
2XBPF
Q302
1st IF AmP
IC301
2nd Mixer
F304
BPF
2nd IF freq 455KHz
2nd IF Amp
Discriminat
IC304
PLLT
Q309,310
Q301 ~ 308
IC301 ~ 303
RX
TX
Q311 ~ 313
RX AF

BLOCK DIAGRAM (BASE UNIT)
(RF Unit)

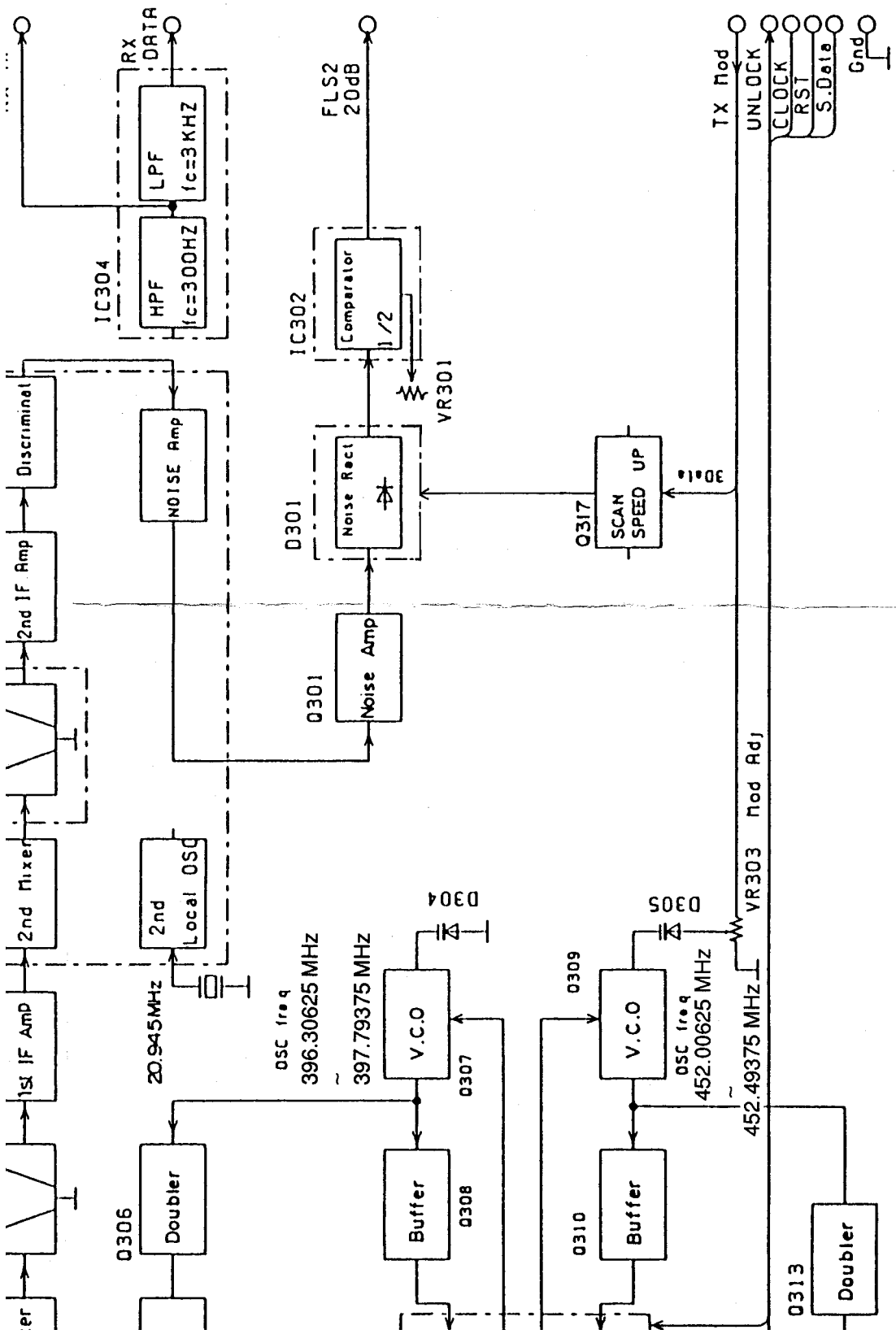

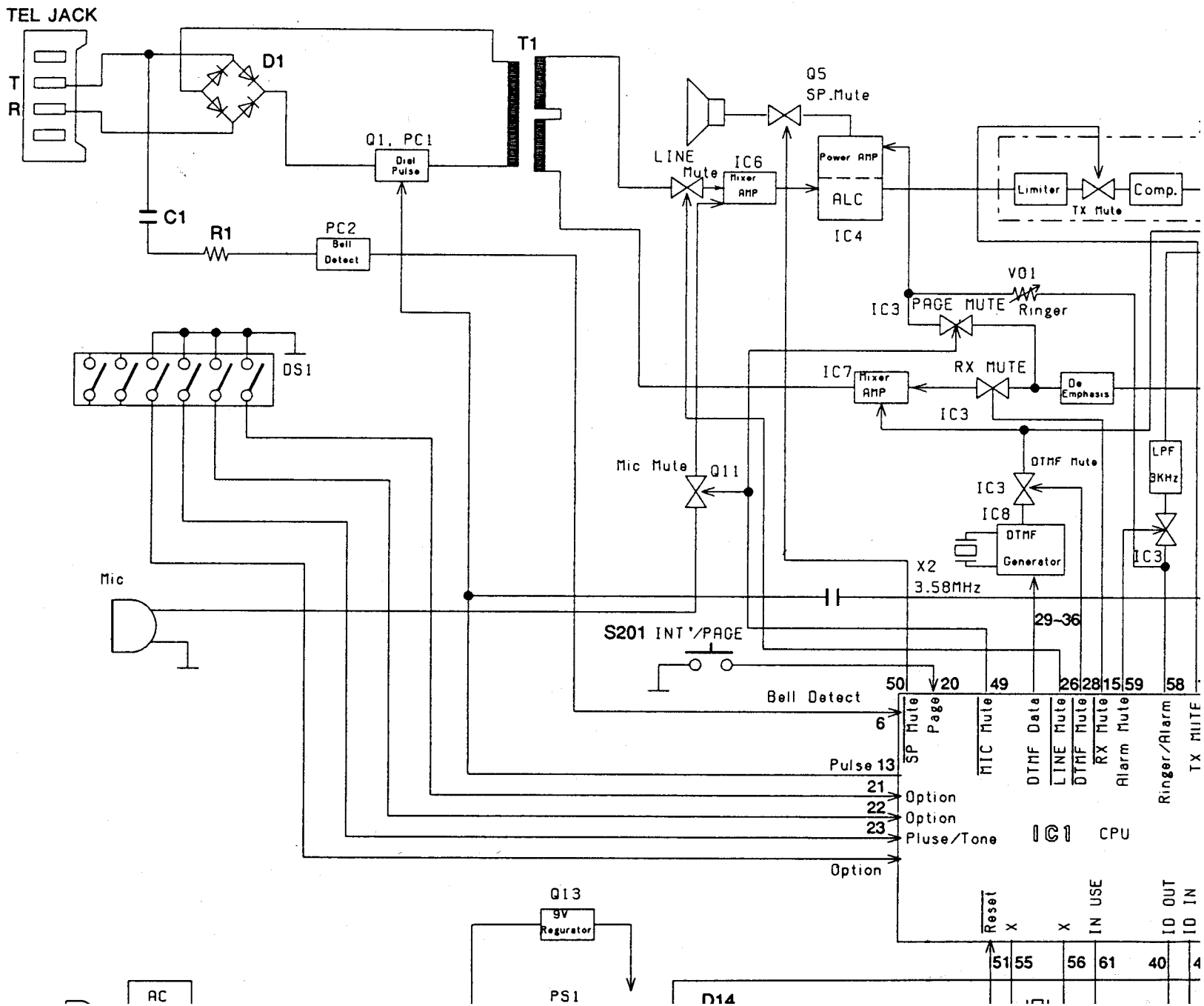
TEL JACK
T
R
D1
T1
Q1, PC1
Dial Pulse
C1
R1
PC2
Bell Detect
Q5
SP.Mute
LINE Mute
IC6
Mixer AMP
Power AMP
ALC
IC4
Limiter
TX Mute
Comp.
VO1
IC3
PAGE MUTE
Ringer
DS1
IC7
Mixer AMP
RX MUTE
De Emphasis
IC3
Mic Mute
Q11
DTMF Mute
IC3
IC8
DTMF Generator
LPF 3KHz
IC3
X2
3.58MHz
Mic
S201 INT'/PAGE
29~36
50
20
49
26
28
15
59
58
Bell Detect
6
SP Mute
Page
MIC Mute
DTMF Data
LINE Mute
DTMF Mute
RX Mute
Alarm Mute
Ringer/Alarm
TX MUTE
Pulse 13
21
Option
22
Option
23
Pluse/Tone
IC1 CPU
Option
Q13
9V Regurator
Reset
X
X
IN USE
ID OUT
ID IN
51
55
56
61
40
AC
PS1
D14

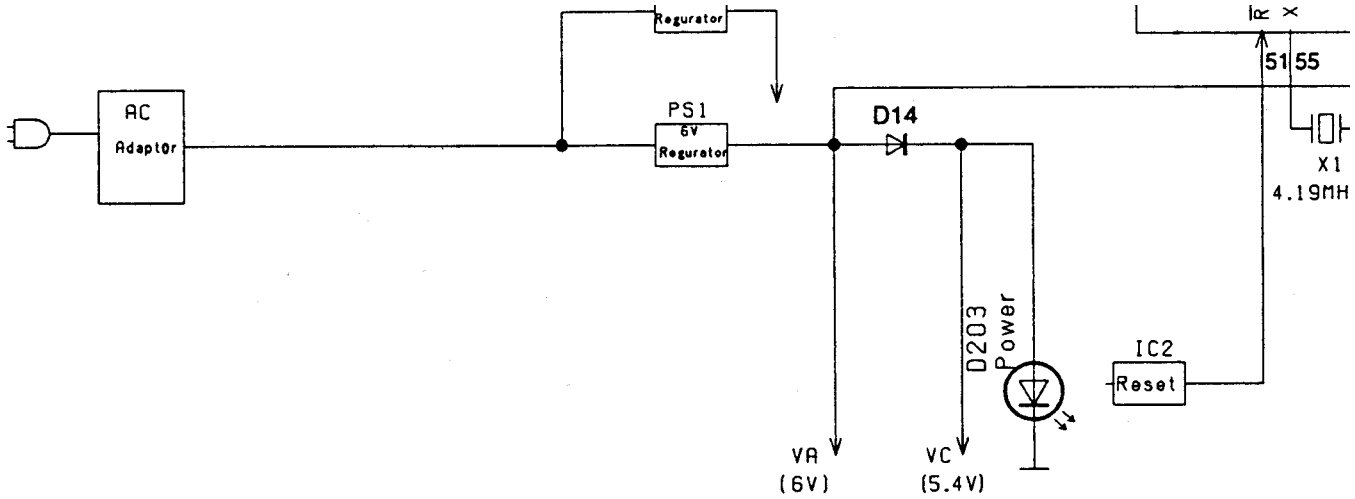
Regurator
AC
Adaptor
PS1
6V
Regurator
D14
51
55
X1
4.19MH
D203
Power
IC2
Reset
VA
(6V)
VC
(5.4V)

Fig. 18

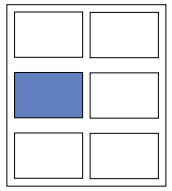

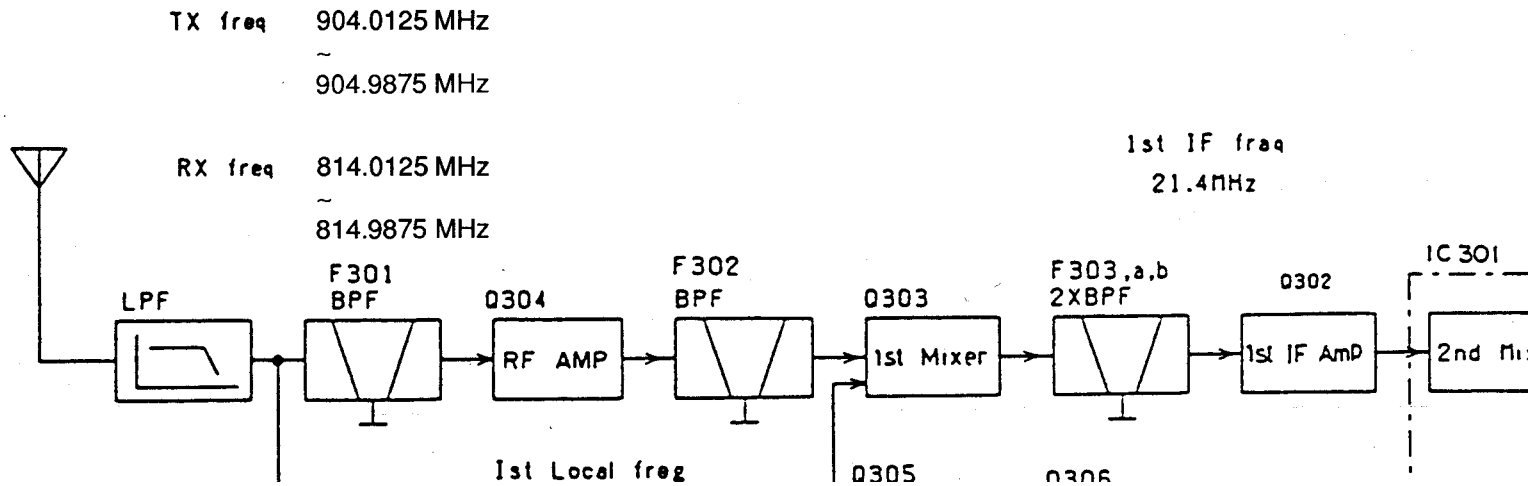
TX freq
904.0125 MHz
~
904.9875 MHz
RX freq
814.0125 MHz
~
814.9875 MHz
1st IF freq
21.4MHz
LPF
F301
BPF
Q304
RF AMP
F302
BPF
Q303
1st Mixer
F303,a,b
2XBPF
Q302
1st IF AmP
IC301
2nd Mi
1st Local freq
Q305
Q306

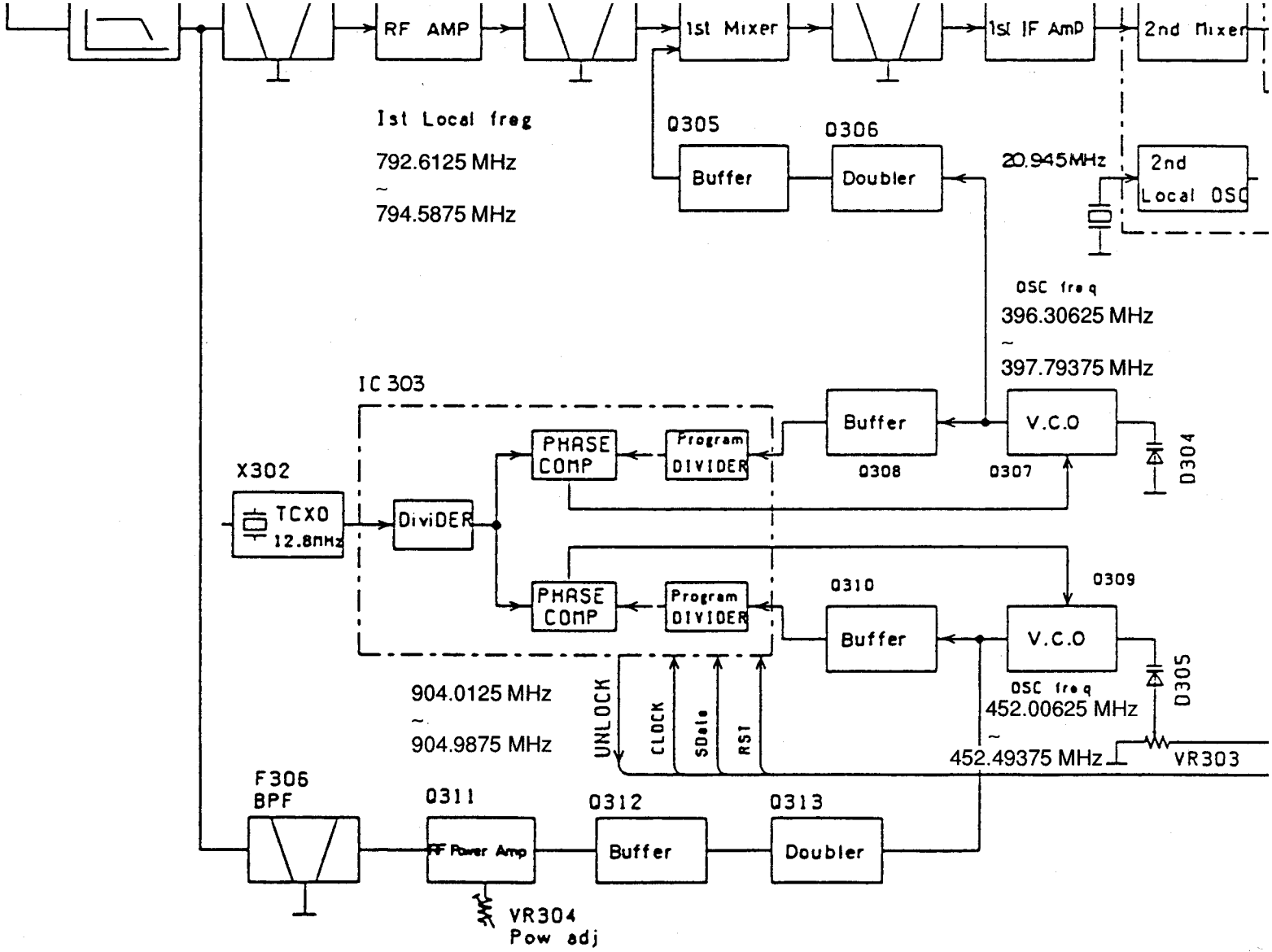
RF AMP
1st Mixer
1st IF AmP
2nd Mixer
1st Local freq
792.6125 MHz
~
794.5875 MHz
Q305
Buffer
Q306
Doubler
20.945MHz
2nd
Local OSC
OSC freq
396.30625 MHz
~
397.79375 MHz
IC 303
PHASE COMP
Program DIVIDER
Buffer
Q308
V.C.O
Q307
Q304
X302
TCXO
12.8MHz
DiviDER
PHASE COMP
Program DIVIDER
Q310
Buffer
Q309
V.C.O
Q305
904.0125 MHz
~
904.9875 MHz
UNLOCK
CLOCK
SData
RST
OSC freq
452.00625 MHz
~
452.49375 MHz
VR303
F306
BPF
Q311
RF Power Amp
Q312
Buffer
Q313
Doubler
VR304
Pow adj

BLOCK DIAGRAM (P
(Main P.

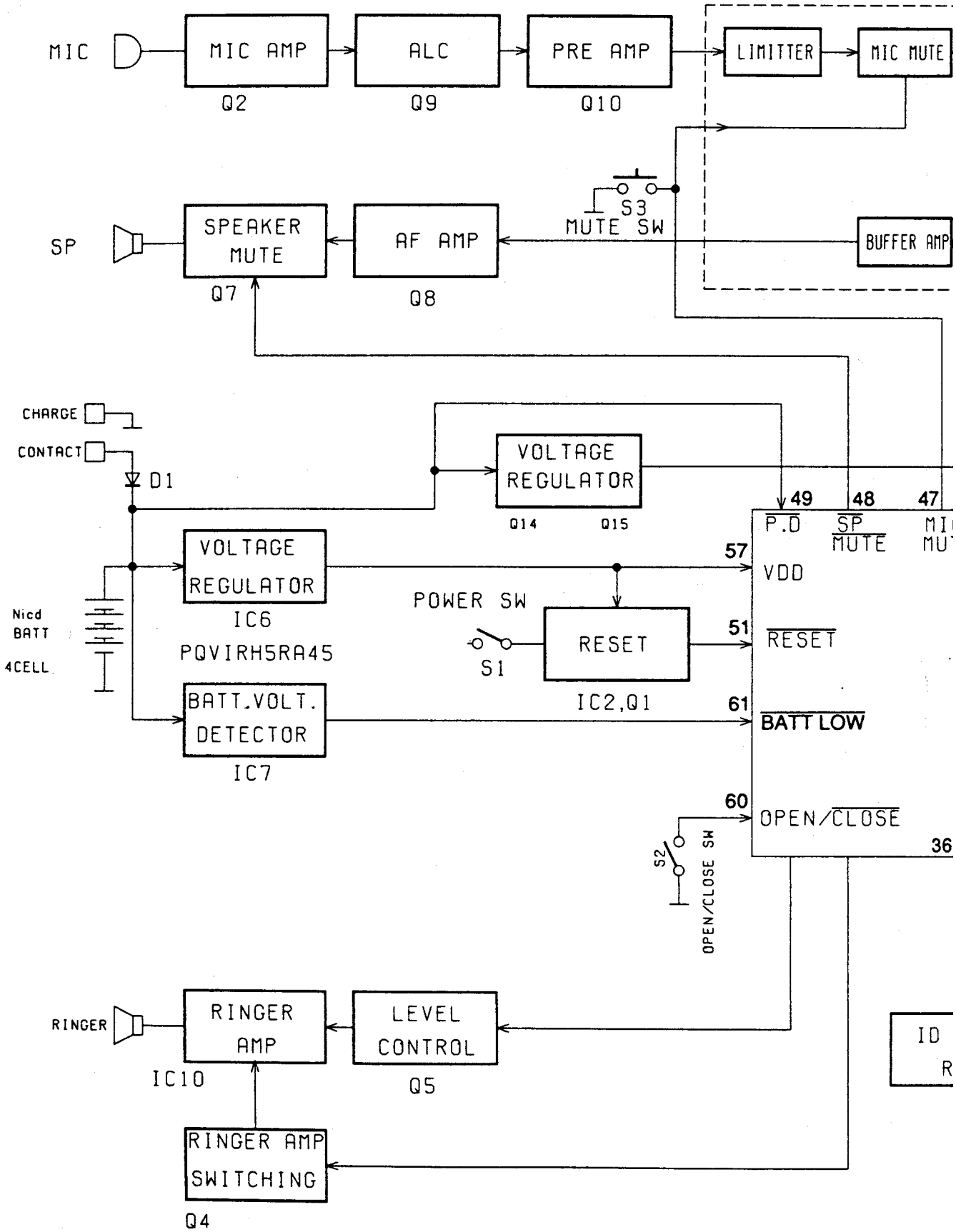

Fig. 33

ıGRAM (PORTABLE HANDSET)
(Main P.C. Board)

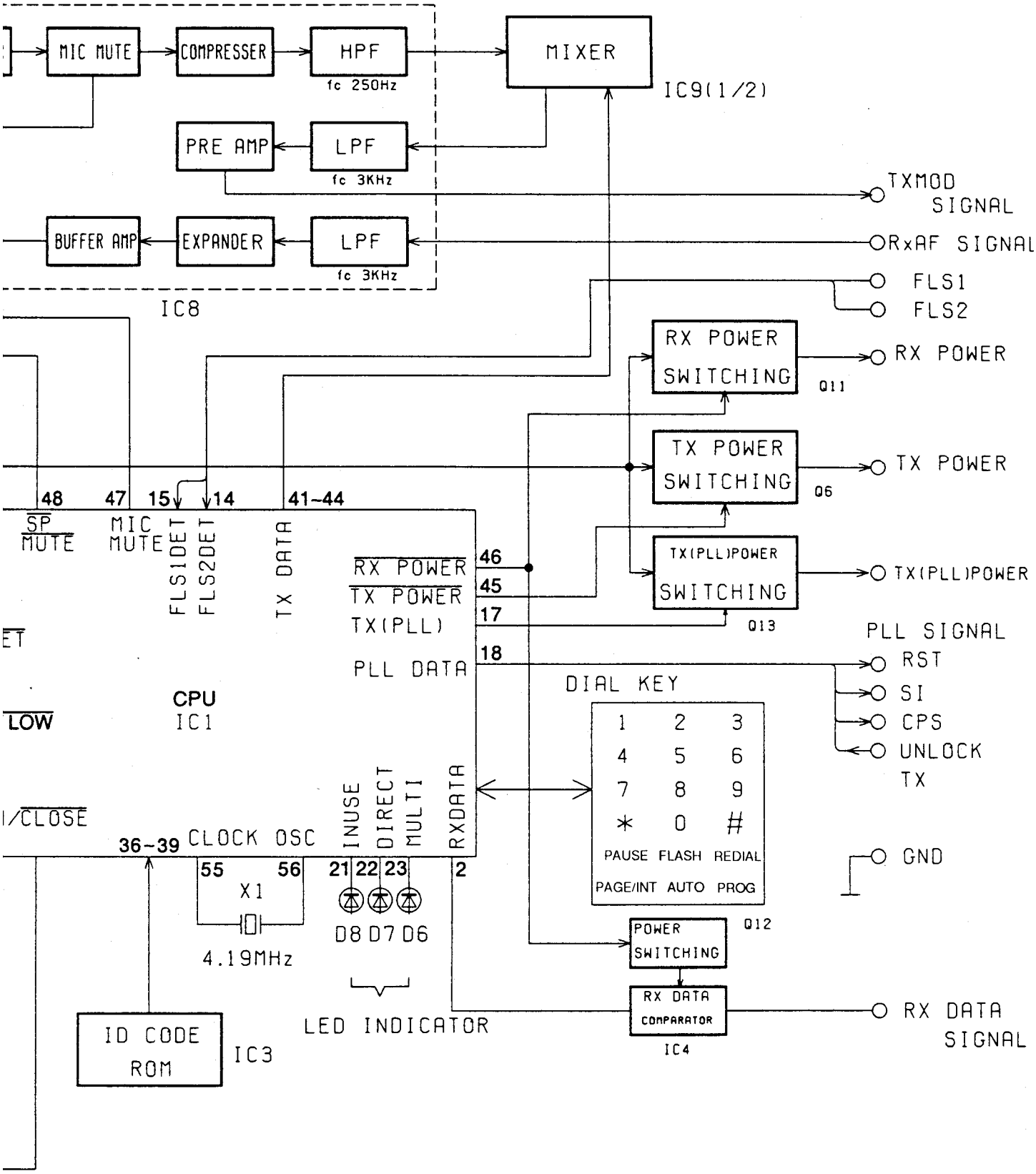

Fig. 33

BLOCK DIAGRAM (PORTABLE
(RF Unit)

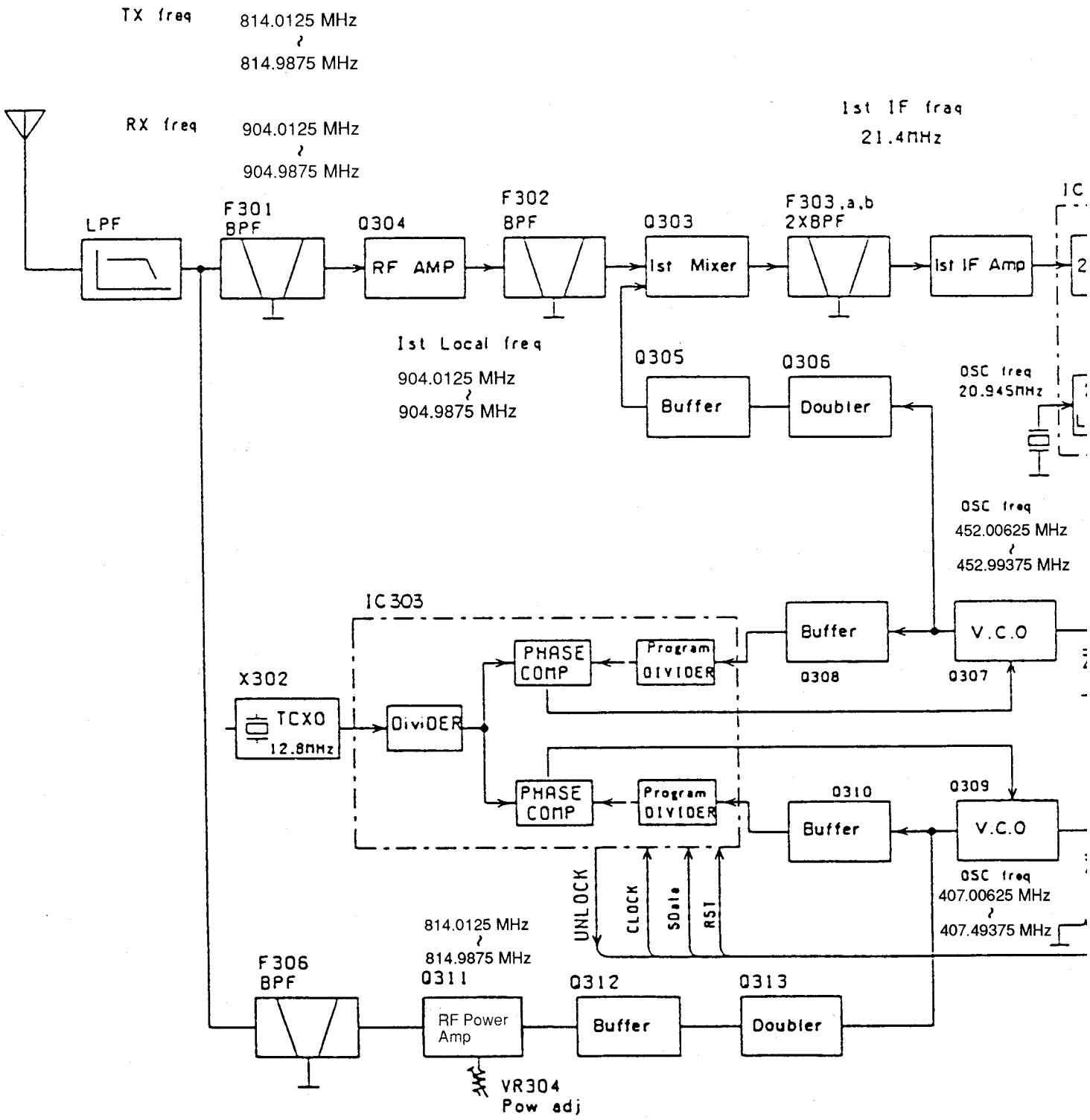

Fig. 34

AM (PORTABLE HANDSET)
(RF Unit)

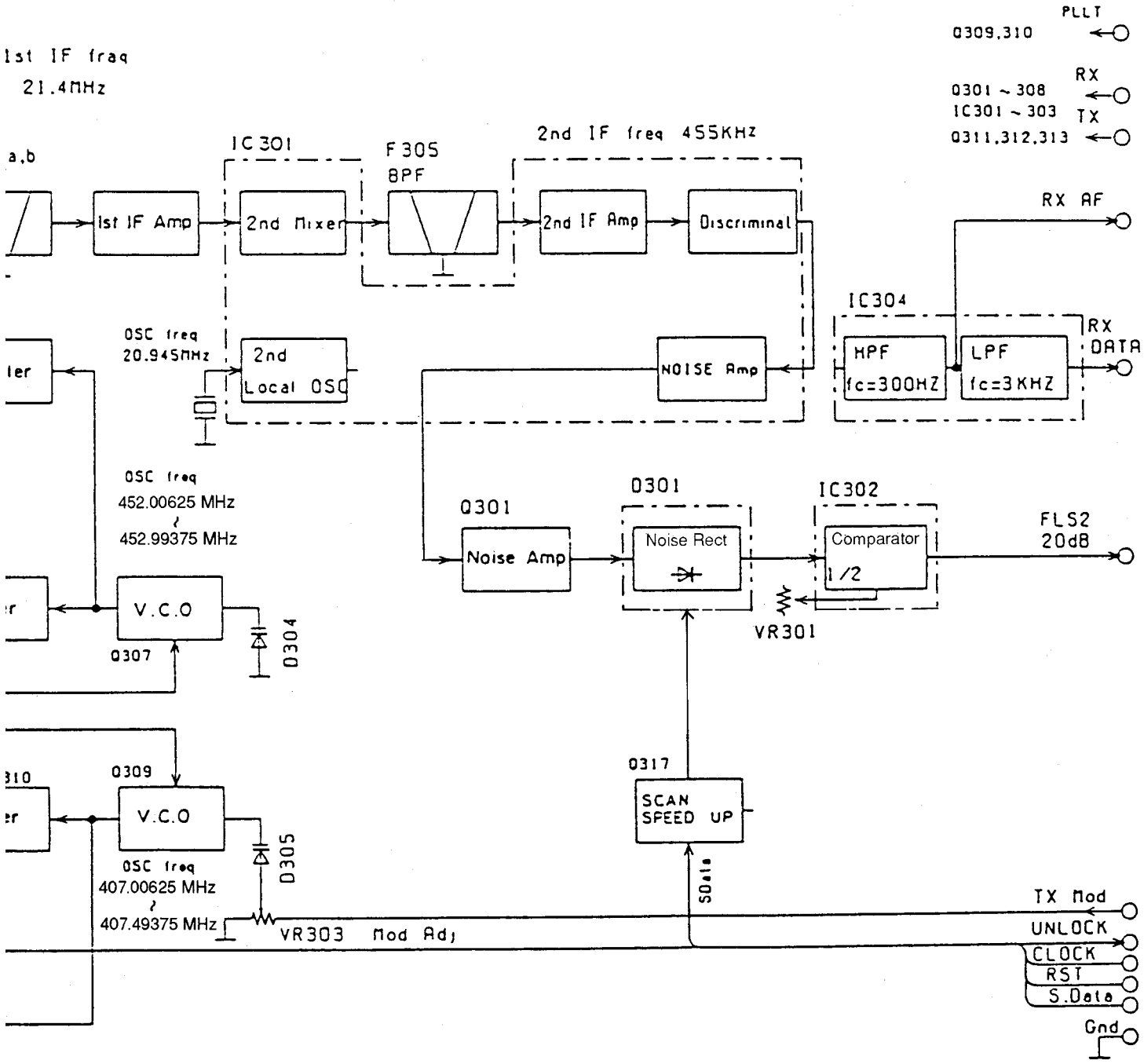

Fig. 34

HOW TO CHANGE ID CODE

(WHEN YOU HAVE NOT ID ROM WRITER)

Base Unit:	Portable Handset:
Take off AC adaptor. Connect the CPU side of R114 of Base Unit and the foil of pin 7 of IC9 with lead wire. Set AC adaptor. Consequently, ID code=00000 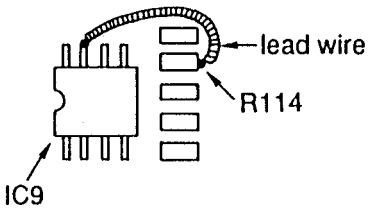 	Connect the CPU side of R72 of Portable Handset and the foil of pin 7 of IC3 with lead wire. Turn on the power switch. Consequently, ID code=00000 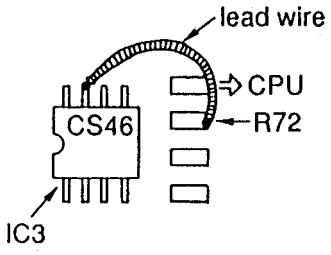

CABINET AND ELECTRICAL PARTS LOCATION (BASE UNIT)

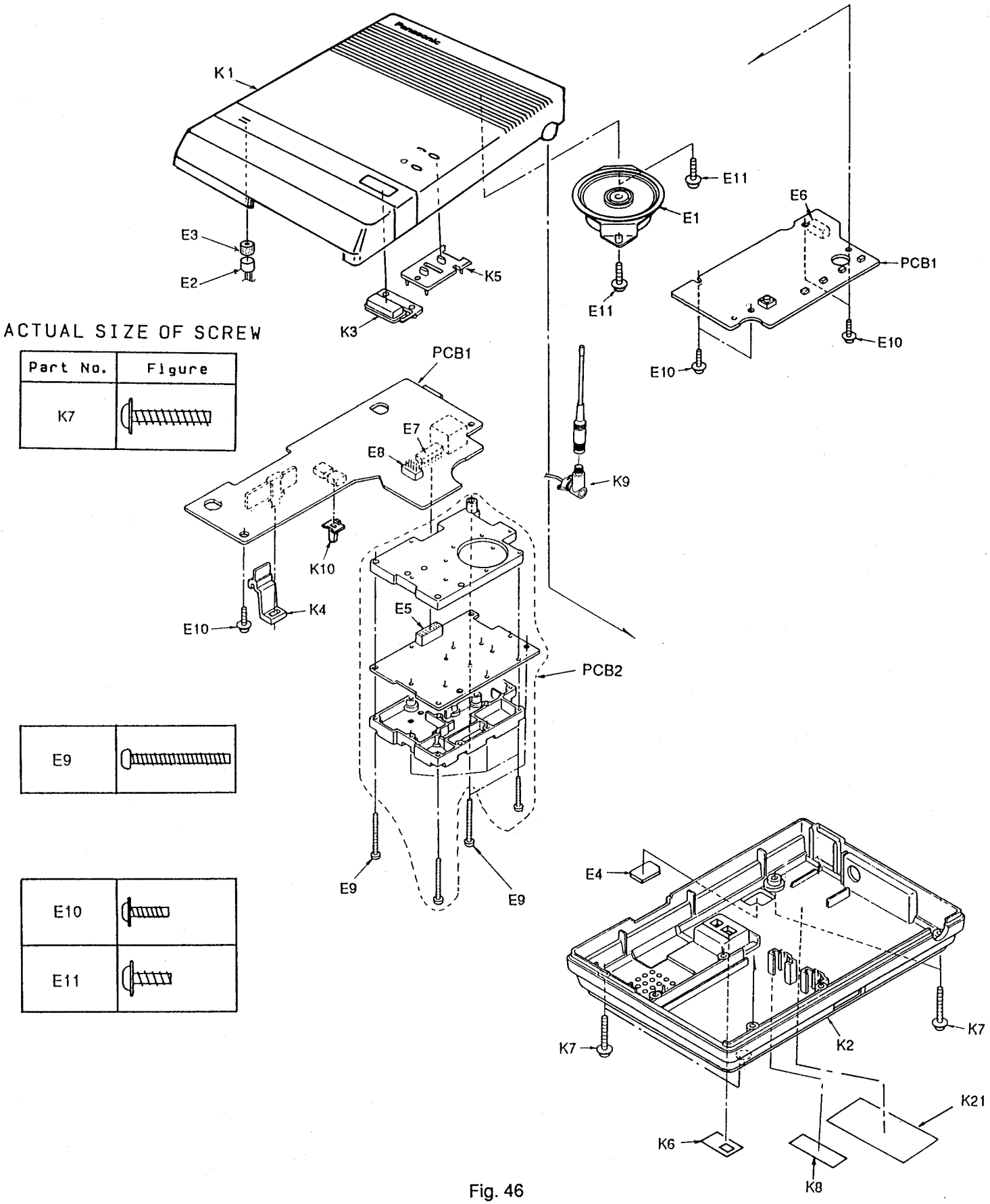

Fig. 46

CABINET AND ELECTRICAL PARTS LOCATION (PORTABLE HANDSET)

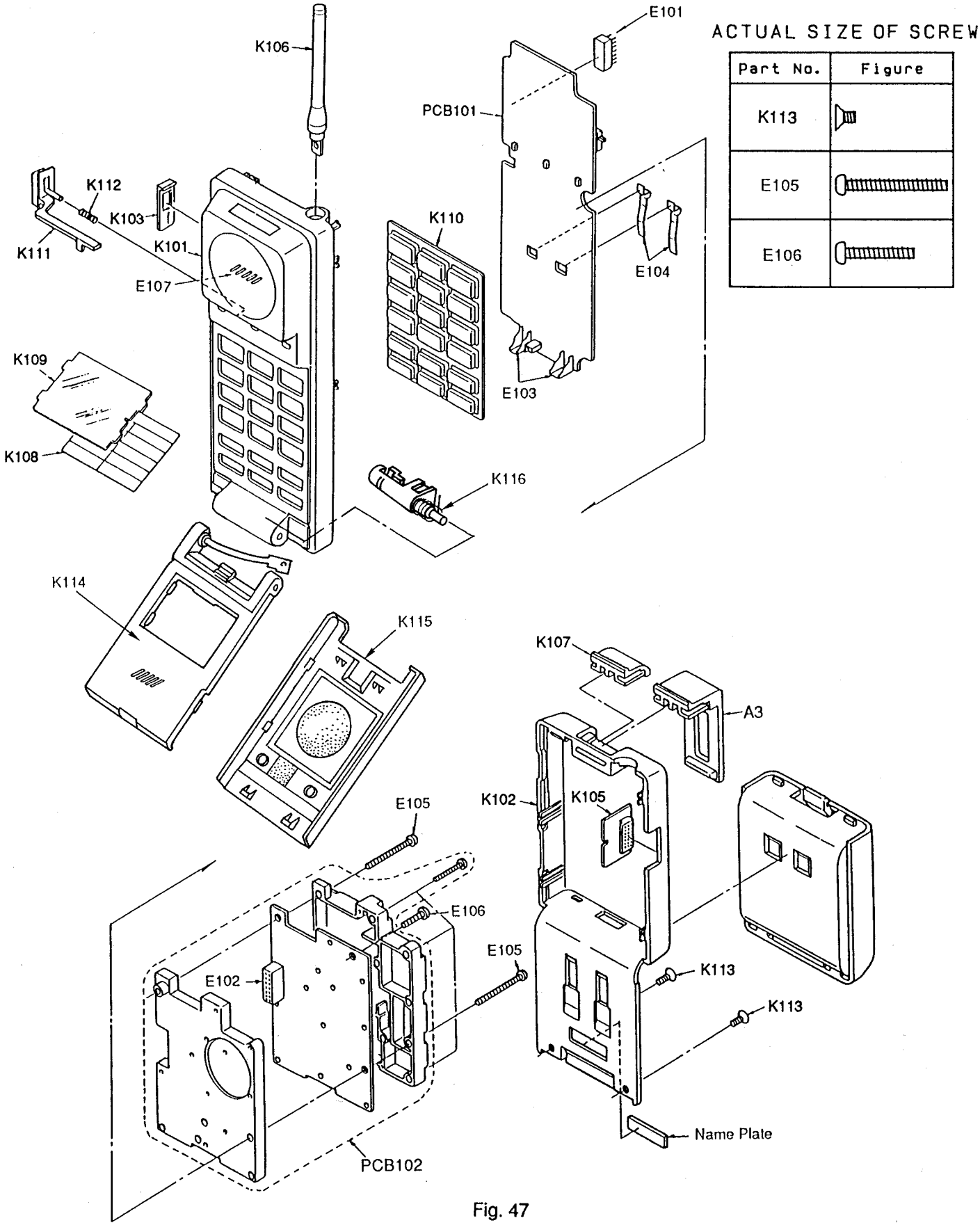

Fig. 47

ACCESSORIES AND PACKING MATERIALS

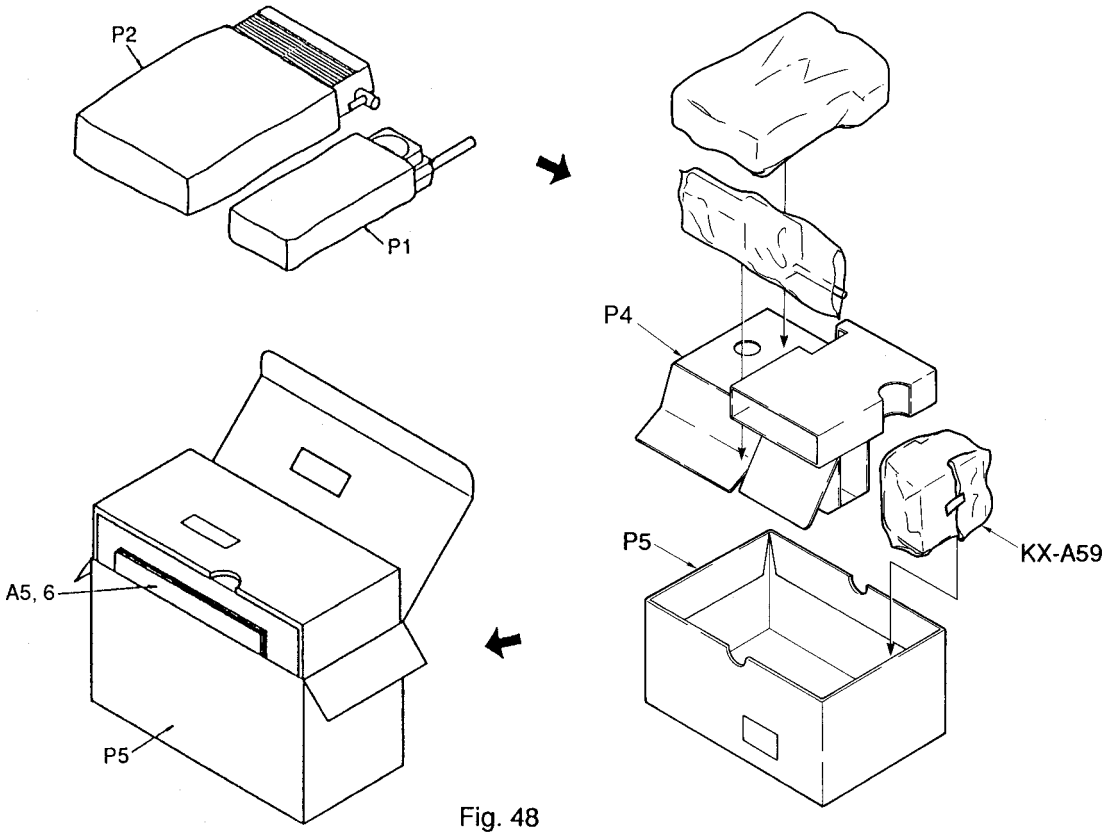

Fig. 48

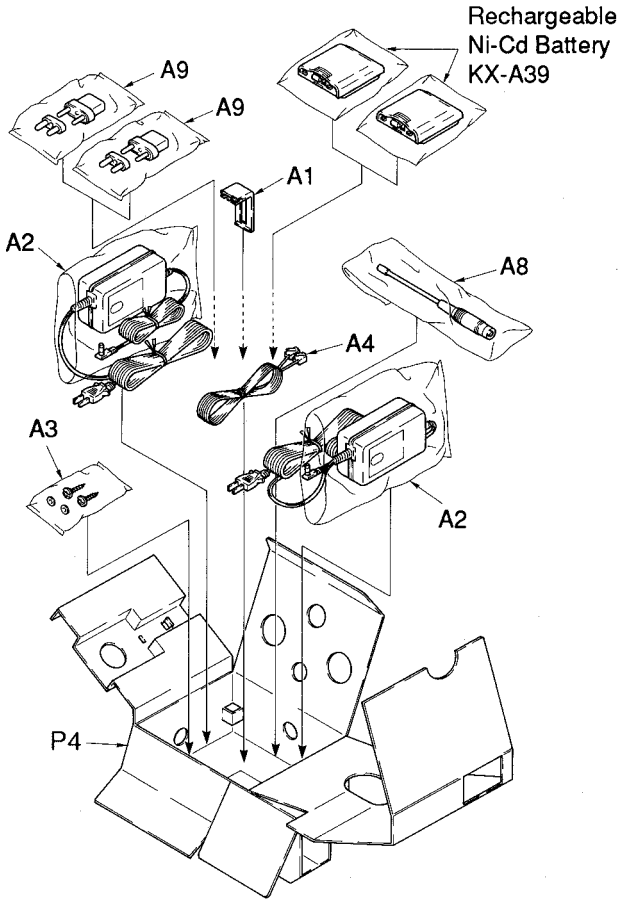

Notes: The rechargeable Ni-Cd battery KX-A39 are available through sales route of Panasonic.

Fig. 49

This replacement parts list is KX-T7980BX only.

REPLACEMENT PARTS LIST

BASE UNIT

Notes:

1. RTL (Retention Time Limited)
   The marking (RTL) indicates that the Retention Time is limited for this item.
   After the discontinuation of this assembly in production, the item will continue to be available for a specific period of time.
   The retention period of availability is dependent on the type of assembly, and in accordance with the laws governing part and product retention.
   After the end of this period, the assembly will no longer be available.
2. Important safety notice.
   Components identified by the ⚠ mark special characteristics important for safety.
   When replacing any of these components, use only manufacturer's specified parts.
3. The S mark indicates service standard parts and may differ from production parts.
4. RESISTORS & CAPACITORS
   Unless otherwise specified.
   All resistors are in ohms(Ω) k=1000Ω,M=1000kΩ
   All capacitors are in MICRO FARADS(μF) P=μμF
   *Type &Wattage of Resistor

Type

ERC:Solid	ERX:Metal Film	PQ4R:Carbon
ERD:Carbon	ERG:Metal Oxide	ERS:Fusible Resistor
PQRD:Carbon	ER0:Metal Film	ERF:Cement Resistor

Wattage

10,16:1/8W	14,25:1/4W	12:1/2W	1:1W	2:2W	3:3W

*Type & Voltage of Capacitor

Type

ECFD:Semi-Conductor	ECCD,ECKD,ECBT,PQCBC : Ceramic
ECQS:Styrol	ECQE,ECQV,ECQG : Polyster
PQCUV:Chip	ECEA,ECSZ : Electrolytic
ECQMS:Mica	ECQP : Polyproplylene

Voltage

ECQ Type	ECQG ECQV Type	ECSZ Type	Others	
1H: 50V	05: 50V	0F:3.15V	0J :6.3V	1V :35V
2A:100V	1:100V	1A:10V	1A :10V	50,1H:50V
2E:250V	2:200V	1V:35V	1C :16V	1J :63V
2H:500V		0J:6.3V	1E,25:25V	2A :100V

Ref. No.	Part No.	Part Name & Description	Pcs
		CABINET PARTS	
K1	PQKM10124Z1	UPPER CABINET	1
K2	PQYF10050Z1	LOWER CABINET	1
K3	PQBC268Z4	BUTTON, PAGE/INTERCOM	1
K4	PQBD158Z4	KNOB, RINGER VOLUME	1
K5	PQHR9470Y	LED PANEL	1
K6	PQHR10130Z	COVER	1
K7	XTW3+S16M	SCREW	4
K8	PQGT10798Z	NAME PLATE	1
K9	PQJJ1J001Y	ANNTENNA CONNECTOR	1
K10	PQBD10003Z3	KNOB, TONE/ PULSE	1

Ref. No.	Part No.	Part Name & Description	Pcs
		ELECTRICAL PARTS	
E1	PQAS5P05Z	SPEAKER	1
E2	PQJM119Z	MICROPHONE	1
E3	PQHG554Z	RUBBER, MICROPHONE	1
E4	PQHR5397Z	COVER	1
E5	PQJS14X60Z	CONNECTOR, 14P (CN301)	1
E6	PQJS10X61Z	CONNECTOR, 10P (CN201)	1
E7	PQJP14G77Z	CONNECTOR, 14P (CN1)	1
E8	PQJP10G78Z	CONNECTOR, 10P (CN2)	1
E9	XTN26+20C	SCREW	2
E10	XTW26+8F	SCREW	5
E11	XTW3+S8M	SCREW	2
		MAIN P. C. BOARD PARTS	
PCB1	PQWP7980BXH	P.C.BOARD ASS'Y (RTL) ⚠	1
		(ICS)	
IC1	MN170801KAV	IC	1
IC2	PQVITC4069UBF	IC	1
IC3	PQVITC4066BF	IC	1
IC4	AN7104	IC	1
IC5	AN6165SB	IC	1
IC6	PQVINJM4558M	IC	1
IC8	PQVILR408931	IC	1
IC9	PQWIT9000XS	IC	1
IC10	Not Used		
IC13	PQVITC4S66F	IC	1
IC14	PQVIJM4560M	IC	1
		(TRANSISTORS)	
Q1	2SA1625	TRANSISTOR(SI)	1
Q2	2SC4116	TRANSISTOR(SI)	1
Q3	2SC4116	TRANSISTOR(SI)	1
Q5	2SD1328	TRANSISTOR(SI)	1
Q6	2SD601R	TRANSISTOR(SI)	1
Q9	2SB970A	TRANSISTOR(SI) S	1
Q11	2SC2859Y	TRANSISTOR(SI)	1
Q12	PQVTDTA143E	TRANSISTOR(SI)	1
Q13	2SD1994A	TRANSISTOR(SI)	1
Q19	2SD601R	TRANSISTOR(SI)	1
Q21	UN5213	TRANSISTOR(SI) S	1
Q204	2SD601R	TRANSISTOR(SI)	1
Q205	2SD601R	TRANSISTOR(SI)	1
		(DIODES)	
D1	PQVDS1ZB40FI	DIODE(SI)	1
D5	MA153	DIODE(SI)	1
D7	MA8030M	DIODE(SI) S	1
D14	MA151K	DIODE(SI)	1
D15	PQVDR10M2	DIODE(SI)	1
D17	MA151K	DIODE(SI)	1
D20	PQVDR5.6M2	DIODE(SI)	1
D27, 80	MA110	DIODE(SI)	2

This replacement parts list is KX-T7980BX only.

Ref. No.	Part No.	Part Name & Description	Pcs
		(LEDS)	
D202	LN1261C	LED	1
D203	LN1261C	LED	1
D204	LN1361C	LED	1
D210	PQVDR6.2M2	DIODE(SI)	1
		(CRYSTALS)	
X1	PQVCJ4194N9Z	CRYSTAL, 4.194 MHz	1
X2	PQVBT3.58G5	CRYSTAL, 3.58 MHz	1
		(VARISTOR)	
ZNR	ERZTC5AK431	VARIABLE RESISTOR ⚠	1
		(VARIABLE RESISTOR)	
R39	PQVAL204B24A	VOLUME CONTROL, 20K(Ω) S	1
		(COILS AND TRANSFORMER)	
L6~8	ELEV330KA	COIL	3
T1	PQLT8F3A	TRANSFORMER ⚠	1
		(SWITCHES)	
DS1	PQSSX13Z	SLIDE SWITCH	1
S1	ESD11V120	SLIDE SWITCH	1
		(JACKS)	
J1	PQJJ1B3Z	JACK, DC IN	1
J2	PQJJ1TA11Z	JACK, TEL. LINE	1
		(OTHERS)	
PC1	PQVITLP627	PHOTO ELECTRIC TRANSDUCER ⚠	1
PC2	PQVIPS27051N	PHOTO ELECTRIC TRANSDUCER ⚠	1
PS1	PQVISI8202L	PHOTO SENSOR	1
		(RESISTORS)	
R1	PQ4R10XJ473	47K ⚠	1
R2	PQ4R10XJ104	100K	1
R3	PQ4R10XJ472	4.7K	1
R4	PQ4R10XJ103	10K	1
R5	ERJ3GEYJ472	4.7K	1
R6	ERJ3GEYJ223	22K	1
R7	ERJ3GEYJ104	100K	1
R9	ERJ3GEYJ224	220K	1
R11	PQ4R10XJ222	2.2K	1
R12	ERJ3GEYJ333	33K	1
R17	ERJ3GEYJ123	12K	1
R18	Chip Jumper		1
R19	PQ4R10XJ393	39K	1
R20	ERJ3GEYJ683	68K	1
R21	ERJ3GEYJ103	10K	1
R24	ERJ3GEYJ104	100K	1
R25	ERJ3GEYJ104	100K	1
R26	ERJ3GEYJ105	1M	1
R27	ERJ3GEYJ333	33K	1
R28	ERJ3GEYJ102	1K	1
R30	PQ4R18XJ100	10	1
R31	PQ4R10XJ104	100K	1
R32	PQ4R10XJ222	2.2K	1
R33	ERJ3GEYJ682	6.8K	1
R34	ERJ3GEYJ122	1.2K	1
R35	ERJ3GEYJ332	3.3K	1
R36	ERJ3GEYJ223	22K	1

Ref. No.	Part No.	Value	Pcs
R37	ERJ3GEYJ473	47K	1
R38	PQ4R10XJ182	1.8K	1
R40	Chip Jumper		
R41	ERJ3GEYJ272	2.7K	1
R43	ERJ3GEYJ104	100K	1
R44	ERJ3GEYJ104	100K	1
R45	ERJ3GEYJ333	33K	1
R46	PQ4R10XJ332	3.3K	1
R47	ERJ3GEYJ153	15K	1
R49	PQ4R10XJ333	33K	1
R50	PQ4R10XJ333	33K	1
R51	ERJ3GEYJ104	100K	1
R52	ERJ3GEYJ473	47K	1
R53	ERJ3GEYJ682	6.8K	1
R54	ERJ3GEYJ103	10K	1
R55	ERJ3GEYJ103	10K	1
R56	ERJ3GEYJ473	47K	1
R57	ERJ3GEYJ103	10K	1
R58	ERJ3GEYJ104	100K	1
R59	ERJ3GEYJ103	10K	1
R60	ERJ3GEYJ103	10K	1
R61	ERJ3GEYJ273	27K	1
R62	ERJ3GEYJ273	27K	1
R63	PQ4R10XJ331	330	1
R64	ERJ3GEYJ104	100K	1
R65	ERJ3GEYJ183	18K	1
R66	ERJ3GEYJ823	82K	1
R67	ERJ3GEYJ563	56K	1
R68	ERJ3GEYJ103	10K	1
R69	ERJ3GEYJ153	15K	1
R70	ERJ3GEYJ153	15K	1
R71	PQ4R10XJ103	10K	1
R72	ERJ3GEYJ103	10K	1
R73	ERJ3GEYJ474	470K	1
R76	Not Used		
R78	ERJ3GEYJ104	100K	1
R79	ERJ3GEYJ222	2.2k	1
R80	ERJ3GEYJ332	3.3K	1
R81	ERJ3GEYJ222	2.2K	1
R82	ERJ3GEYJ393	39K	1
R83	ERJ3GEYJ183	18K	1
R84	ERJ3GEYJ333	33K	1
R85	ERJ3GEYJ473	47k	1
R86	ERJ3GEYJ272	2.7k	1
R87	ERJ3GEYJ474	470K	1
R88	ERJ3GEYJ105	1M	1
R89	ERJ3GEYJ562	5.6K	1
R90	ERJ3GEYJ104	100K	1
R91	PQ4R10XJ222	2.2K	1
R92	ERJ3GEYJ562	5.6K	1
R93	ERJ3GEYJ822	8.2K	1
R94	ERJ3GEYJ562	5.6K	1
R95	ERJ3GEYJ223	22K	1
R96	ERJ3GEYJ822	8.2K	1
R97	ERJ3GEYJ473	47K	1
R98	ERJ3GEYJ103	10K	1
R99	ERJ3GEYJ104	100K	1
R101	PQ4R10XJ332	3.3K	1
R102	ERJ3GEYJ474	470K	1
R104	ERJ3GEYJ104	100K	1
R105	ERJ3GEYJ474	470K	1
R106	ERJ3GEYJ272	2.7K	1
R107	ERJ3GEYJ104	100K	1
R108	ERJ3GEYJ183	18K	1
R109	PQ4R10XJ103	10K	1
R110	ERJ3GEYJ104	100K	1
R111	PQ4R10XJ822	8.2K	1
R112	ERJ3GEYJ104	100K	1
R113	ERJ3GEYJ223	22K	1
R114	ERJ3GEYJ223	22K	1

This replacement parts list is KX-T7980BX only.

Ref. No.	Part No.	Value	Pcs
R115	ERJ3GEYJ223	22K	1
R116	ERJ3GEYJ223	22K	1
R117	ERJ3GEYJ104	100K	1
R121	ERJ3GEYJ102	1k	1
R124	ERJ3GEYJ332	3.3K	1
R125	Not Used		
R126	Not Used		
R127	Not Used		
R128	PQ4R10XJ152	1.5K	1
R130	ERJ3GEYJ104	100K	1
R132	Not Used		
R133	Not Used		
R134	Not Used		
R140	PQ4R10XJ123	12k	1
R141	ERJ3GEYJ274	270K	1
R142	ERDS2TJ331	330	1
R143	ERJ3GEYJ154	150K	1
R144	ERJ3GEYJ183	18K	1
R146	ERJ3GEYJ332	3.3K	1
R147	ERJ3GEYJ183	18K	1
R148	ERJ3GEYJ154	150K	1
R149	ERJ3GEYJ104	100K	1
R150	ERJ3GEYJ104	100K	1
R154	ERJ3GEYJ104	100K	1
R155	ERJ3GEYJ104	100K	1
R156	ERJ3GEYJ104	100K	1
R157	ERJ3GEYJ104	100K	1
R158	ERJ3GEYJ104	100K	1
R159	ERJ3GEYJ104	100K	1
R160	ERJ3GEYJ104	100K	1
R161	ERJ3GEYJ104	100K	1
R163	ERJ3GEYJ103	10K	1
R164	ERJ3GEYJ272	2.7K	1
R167	ERJ3GEYJ104	100K	1
R168	ERJ3GEYJ104	100K	1
R169	ERJ3GEYJ104	100K	1
R171	ERJ3GEYJ333	33K	1
R180	ERJ3GEYJ103	10K	1
R201	PQ4R10XJ102	1K	1
R202	Not Used		
R203	PQ4R10XJ102	1K	1
R204	Not Used		
R205	Not Used		
R206	Not Used		
R207	Not Used		
R208	Not Used		
R209	Not Used		
R210	PQ4R10XJ823	82K	1
R211	PQ4R10XJ102	1K	1
R212	PQ4R10XJ103	10K	1
R213	PQ4R10XJ821	820	1
R214	PQ4R10XJ470	47	1
R215	PQ4R10XJ273	27K	1
R216	PQ4R10XJ473	47K	1
R217	PQ4R10XJ392	3.9K	1
R218	PQ4R10XJ564	560K	1
R219	PQ4R10XJ154	150K	1
R220	PQ4R10XJ181	180	1
R221	PQ4R10XJ102	1K	1
R222	PQ4R10XJ153	15K	1
R223	Not Used		
R255	PQ4R10XJ222	2.2K	1
R256	PQ4R10XJ222	2.2K	1

Ref. No.	Part No.	Value	Pcs
		(CAPACITORS)	
C1	ECEA2EHNR47	0.47 ⚠	1
C4	ECEA1HU220	22	1
C7	PQCUV1E104MD	0.1	1
C8	PQCUV1E104MD	0.1	1
C9	PQCUV1H105JC	1	1
C11	ECUV1E105ZF	1	1
C12	PQCUV1H102J	0.001	1
C13	PQCUV1H105JC	1	1
C14	ECUV1H561JCV	560P	1
C15	ECEA0JK221	220	1
C16	ECEA0JU102	1000	1
C17	ECEA1CKS220	22	1
C18	PQCUV1C683MD	0.068	1
C19	ECEA0JU331	330	1
C20	ECUV1H102KBV	0.001	1
C21	ECUV1H222KBV	0.0022	1
C22	ECEA1HU100	10	1
C23	ECUV1H153KBV	0.015	1
C24	PQCUV1H105JC	1	1
C26	PQCUV1E473MD	0.047	1
C27	PQCUV1E104MD	0.1	1
C28	ECEA1CKS100	10	1
C29	ECUV1H561JCV	560P	1
C30	ECUV1H103KBV	0.01	1
C31	PQCUV1H105JC	1	1
C32	ECEA1HU100	10	1
C33	PQCUV1E104MD	0.1	1
C34	ECEA1HU100	10	1
C35	PQCUV1C683MD	0.068	1
C36	ECST0JY475	4.7	1
C37	ECEA1HU100	10	1
C39	ECUV1H272KBV	0.0027	1
C40	ECUV1H681JCV	680P	1
C41	ECEA1EU470	47	1
C42	ECUV1H104MD	0.1	1
C43	PQCUV1E104MD	0.1	1
C44	PQCUV1E104MD	0.1	1
C45	PQCUV1E104MD	0.1	1
C46	PQCUV1E104MD	0.1	1
C47	ECUV1H104ZFV	0.1	1
C48	PQCUV1E104MD	0.1	1
C49	ECUV1H822KBV	0.0082	1
C50	ECUV1H682KBV	0.0068	1
C51	ECUV1H331JCV	330P	1
C52	ECEA1HU100	10	1
C53	PQCUV1H333JC	0.033	1
C54	PQCUV1E104MD	0.1	1
C55	ECUV1H153KBV	0.053	1
C56	ECUV1H471JCV	470P	1
C57	PQCUV1H153KB	0.015	1
C58	ECST0JY475	4.7	1
C59	ECEA1EU470	47	1
C60	PQCUV1E104MD	0.1	1
C61	ECUV1H473MDV	0.047	1
C64	PQCUV1E473MD	0.047	1
C65	PQCUV1H333JC	0.033	1
C66	PQCUV1E104MD	0.1	1
C70	ECUV1H180JCV	18P	1
C71	ECUV1H180JCV	18P	1
C72	ECST0GV107	100	1
C73	PQCUV1E104MD	0.1	1
C75	PQCUV1H102J	0.001	1
C80	PQCUV1E104MD	0.1	1
C81	ECEA1EU470	47	1
C83	ECEA1AU221	220	1
C84	ECUV1E105ZF	1	1
C85	PQCUV1E104MD	0.1	1
C86	EECW0HS223Z	0.022	1
C87	ECEA0JU331	330	1

This replacement parts list is KX-T7980BX only.

Ref. No.	Part No.	Value	Pcs
C88	ECEA1AU101	100	1
C89	PQCUV1E104MD	0.1	1
C91	ECEA1EU101	100	1
C95	ECUV1H222KBV	0.0022	1
C96	PQCUV1E104MD	0.1	1
C97	ECST0JY475	4.7	1
C98	ECUV1H104ZFV	0.1	1
C99	PQCUV1E104MD	0.1	1
C100	PQCUV1E104MD	0.1	1
C101	PQCUV1E104MD	0.1	1
C104	ECEA1AU221	220	1
C105	PQCUV1H103KB	0.01	1
C109	ECUV1E105ZF	1	1
C136	ECUV1H471JCV	470P	1
C137	ECUV2H681KB	680P	1
C138	ECUV2H681KB	680P	1
C142	ECUV1H104ZFV	0.1	1
C143	ECUV1H473MDV	0.047	1
C144	ECUV1H471JCV	470P	1
C145	ECUV1H101JCV	100P	1
C146	ECST0JY475	4.7	1
C147	ECUV1H822KBV	0.0082	1
C150	ECUV1H332KBV	0.0033	1
C151	ECUV1H331JCV	330P	1
C152	Not Used		
C153	PQCUV1E104MD	0.1	1
C154	ECUV1H104ZFV	0.1	1
C157	ECUV1E105ZF	1	1
C201	Not Used		
C202	Not Used		
C203	PQCUV1E104MD	0.1	1
C204	PQCUV1E104MD	0.1	1
C205	ECUV1E105ZF	1	1
C206	ECUV1E105ZF	1	1
RF UNIT P. C. BOARD PARTS			
PCB2	PQWU7980BXH	RF UNIT ASS'Y (RTL)	1
		(ICS)	
IC301	PQVIMC3361D	IC	1
IC302	PQVINJM2903M	IC	1
IC303	PQVIM54958FP	IC	1
IC304	PQVINJM2904F	IC	1
IC305	PQVITC4S66F	IC	1
		(TRANSISTORS)	
Q302	2SC4099NT106	TRANSISTOR(SI)	1
Q303	PQVTSGM2006M	TRANSISTOR(SI)	1
Q304	2SC4226R24	TRANSISTOR(SI)	1
Q305	2SC4184T43	TRANSISTOR(SI)	1
Q306	2SC4226R24	TRANSISTOR(SI)	1
Q307	2SC4226R24	TRANSISTOR(SI)	1
Q308	2SC4226R24	TRANSISTOR(SI)	1
Q309	2SC4226R24	TRANSISTOR(SI)	1
Q310	2SC4226R24	TRANSISTOR(SI)	1
Q311	2SC3356R24	TRANSISTOR(SI)	1
Q312	2SC4571R77	TRANSISTOR(SI)	1
Q313	2SC4571R77	TRANSISTOR(SI)	1
Q317	UN5112	TRANSISTOR(SI)	1
		(DIODES)	
D301	MA125	DIODE(SI)	1
D303	MA141K	DIODE(SI)	1
D304	PQVD1SV214	VARISTOR	1
D305	PQVD1SV214	VARISTOR	1
D306	MA141WK	DIODE(SI)	1

Ref. No.	Part No.	Value	Pcs
		(CRYSTALS)	
X301	PQVCG2094N4R	CRYSTAL, 20.94MHz	1
X302	PQVCAT27N128	CRYSTAL, 12.8MHz	1
		(VARIABLE RESISTOR)	
VR302	EVM1SSX50B24	VARIABLE RESISTOR, 20KΩ (B)	1
VR303	EVM1SSX50B24	VARIABLE RESISTOR, 20KΩ (B)	1
VR304	Not Used		
VR305	EVM1SSX50B53	VARIABLE RESISTOR, 5KΩ (B)	1
		(COILS)	
L301	EIV4EJ004E	COIL	1
L302	PQLRI001	COIL	1
L303	PQLQR1F8N8J	COIL	1
L304	PQLQR1F8N8J	COIL	1
L305	PQLQR1F8N8J	COIL	1
		(SAW FILTERS)	
F301	PQVS705H904	SAW FILTER	1
F302	EZFB903AM01	SAW FILTER	1
F303	PQVCM214M15A	SAW FILTER	1
F304	PQVCM214M15A	SAW FILTER	1
F305	PQVFCFUM455E	SAW FILTER	1
F306	EZFB814AM01	SAW FILTER	1
		(VARIABLE CAPACITORS)	
VC301	PQCVTZC060	TRIMMER CAPACITOR	1
VC302	PQCVTZC060	TRIMMER CAPACITOR	1
		(RESISTORS)	
R302	ERJ3GEYJ224	220K	1
R303	Not Used		
R304	ERJ3GEYJ333	33K	1
R305	ERJ3GEYJ153	15K	1
R306	Not Used		
R307	ERJ3GEYJ473	47K	1
R308	ERJ3GEYJ152	1.5K	1
R309	ERJ3GEYJ102	1K	1
R310	ERJ3GEYJ333	33K	1
R311	ERJ3GEYJ184	180K	1
R312	ERJ3GEYJ334	330K	1
R313	ERJ3GEYJ104	100K	1
R314	Not Used		
R315	Not Used		
R316	ERJ3GEYJ681	680	1
R317	ERJ3GEYJ471	470	1
R318	ERJ3GEYJ474	470K	1
R319	ERJ3GEYJ331	330	1
R320	ERJ3GEYJ103	10K	1
R321	ERJ3GEYJ101	100	1
R322	ERJ3GEYJ104	100K	1
R323	ERJ3GEYJ101	100	1
R324	ERJ3GEYJ333	33k	1
R325	ERJ3GEYJ101	100	1
R327	ERJ3GEYJ333	33k	1
R328	ERJ3GEYJ470	47	1
R329	ERJ3GEYJ150	15	1
R330	ERJ3GEYJ392	3.9K	1
R331	ERJ3GEYJ222	2.2K	1
R332	ERJ3GEYJ562	5.6K	1
R333	ERJ3GEYJ331	330	1
R334	ERJ3GEYJ104	100K	1
R335	ERJ3GEYJ221	220	1

This replacement parts list is KX-T7980BX only.

Ref. No.	Part No.	Part Name & Description	Pcs
R336	ERJ3GEYJ681	680	1
R337	ERJ3GEYJ103	10K	1
R338	ERJ3GEYJ103	10K	1
R339	ERJ3GEYJ103	10K	1
R340	ERJ3GEYJ682	6.8K	1
R341	ERJ3GEYJ471	470	1
R342	ERJ3GEYJ471	470	1
R343	ERJ3GEYJ272	2.7K	1
R344	ERJ3GEYJ221	220	1
R345	ERJ3GEYJ224	220K	1
R346	ERJ3GEYJ273	27K	1
R347	ERJ3GEYJ273	27K	1
R348	ERJ3GEYJ681	680	1
R350	ERJ3GEYJ271	270	1
R351	ERJ3GEYJ470	47	1
R352	ERJ3GEYJ392	3.9K	1
R353	ERJ3GEYJ562	5.6K	1
R354	ERJ3GEYJ222	2.2K	1
R355	ERJ3GEYJ151	150	1
R356	ERJ3GEYJ470	47	1
R358	ERJ3GEYJ223	22K	1
R360	ERJ3GEYJ101	100	1
R361	ERJ3GEYJ103	10K	1
R362	ERJ3GEYJ100	10	1
R363	ERJ3GEYJ472	4.7K	1
R365	ERJ3GEYJ100	10	1
R370	ERJ3GEYJ123	12K	1
R373	ERJ3GEYJ334	330K	1
R374	ERJ3GEYJ822	8.2K	1
R375	ERJ3GEYJ103	10K	1
R376	ERJ3GEYJ183	18K	1
R377	ERJ3GEYJ183	18K	1
R378	ERJ3GEYJ123	12K	1
R379	ERJ3GEYJ101	100	1
R380	ERJ3GEYJ101	100	1
R381	ERJ3GEYJ103	10K	1
R382	Not Used		
R383	ERJ3GEYJ100	10	1
R384	ERJ3GEYJ103	10K	1
R385	ERJ3GEYJ473	47K	1
R386	Not Used		
R387	ERJ3GEYJ222	2.2K	1
R388	ERJ3GEYJ102	1K	1
R389	ERJ3GEYJ223	22K	1
R390	ERJ3GEYJ223	22K	1
R391	ERJ3GEYJ103	10K	1
R392	ERJ3GEYJ153	15K	1
R396	ERJ3GEYJ0R00	0	1
R403	PQ4R10XJ000	0	1
R901	ERJ3GEYJ104	100K	1
J11	ERJ3GEYJ000	0	1

Ref. No.	Part No.	Value	Pcs
		(CAPACITORS)	
C300	ECUV1H020CCV	2P	1
C301	Not Used		
C302	PQCUV1E473MD	0.047	1
C303	ECUV1H102KBV	0.001	1
C304	ECUV1H102KBV	0.001	1
C305	Not Used		
C306	PQCUV1H223KB	0.022	1
C307	Not Used		
C308	Not Used		
C309	ECUV1H101JCV	100P	1
C310	ECUV1H102KBV	0.001	1
C311	PQCUV1E104MD	0.1	1
C312	PQCUV1E104MD	0.1	1
C313	ECUV1H680JCV	68P	1
C314	ECUV1H180JCV	18P	1
C315	ECUV1H180JCV	18P	1
C316	ECUV1H060DCV	6P	1
C317	ECUV1H102KBV	0.001	1
C318	ECUV1H102KBV	0.001	1
C319	ECUV1H680JCV	68P	1
C320	ECUV1H1R5CCV	1.5P	1
C321	ECUV1H050CCV	5P	1
C322	ECUV1H102KBV	0.001	1
C323	ECUV1H030CCV	3P	1
C324	ECUV1H030CCV	3P	1
C325	Not Used		
C327	ECUV1H102KBV	0.001	1
C328	ECUV1H050CCV	5P	1
C329	ECUV1H102KBV	0.001	1
C330	ECUV1H102KBV	0.001	1
C331	ECUV1H020CCV	2P	1
C333	ECEV0JV330	33P	1
C334	ECUV1H102KBV	0.001	1
C335	ECUV1H020CCV	2P	1
C336	ECUV1H270JCV	27P	1
C337	ECUV1H020CCV	2P	1
C338	ECUV1H090DCV	9P	1
C339	ECUV1H102KBV	0.001	1
C340	ECUV1H010CCV	1P	1
C341	ECUV1H080DCV	8P	1
C342	ECUV1H060CCV	6P	1
C343	ECUV1H030CCV	3P	1
C344	ECUV1H040CCV	4P	1
C345	ECUV1H080DCV	8P	1
C346	ECUV1H060DCV	6P	1
C347	ECUV1H180JCV	18P	1
C348	ECUV1H103KBV	0.01	1
C349	ECUV1H103KBV	0.01	1
C351	PQCUV1H223KB	0.022	1
C352	ECUV1H102KBV	0.001	1
C356	Not Used		
C357	ECST1CY105	1	1
C360	ECUV1H102KBV	0.001	1
C361	PQCUV1H333JC	0.033	1
C362	ECST1CY225	2.2	1
C363	ECUV1H030CCV	3P	1
C364	ECUV1H080DCV	8P	1
C365	ECUV1H102KBV	0.001	1
C366	PQCUV1H333JC	0.033	1
C367	ECUV1H562KBV	0.0056	1
C369	ECUV1H0R5CCV	0.5P	1
C370	ECUV1H040CCV	4P	1
C371	ECST0JC336	33	1
C372	ECUV1H102KBV	0.001	1
C373	ECUV1H080DCV	8P	1
C374	ECUV1H080CCV	8P	1
C375	ECUV1H180JCV	18P	1
C376	ECUV1H040CCV	4P	1
C377	ECUV1H030CCV	3P	1

This replacement parts list is KX-T7980BX only.

Ref. No.	Part No.	Value	Pcs
C378	ECUV1H080DCV	8P	1
C379	ECUV1H101JCV	100P	1
C380	ECUV1H102KBV	0.001	1
C382	ECUV1H080DCV	8P	1
C383	ECUV1H102KBV	0.001	1
C385	ECUV1H040CCV	4P	1
C386	ECUV1H080DCV	8P	1
C388	ECUV1H040CCV	4P	1
C389	ECUV1H102KBV	0.001	1
C391	ECUV1H100DCV	10P	1
C392	ECUV1H102KBV	0.001	1
C393	Not Used		
C396	PQCUV1H223KB	0.022	1
C397	ECUV1H103KBV	0.01	1
C398	ECUV1H103KBV	0.01	1
C399	ECUV1H103KBV	0.01	1
C400	PQCUV1H105JC	1	1
C401	ECUV1H822KBV	0.0082	1
C402	ECUV1H562KBV	0.0056	1
C404	ECUV1H102KBV	0.001	1
C405	PQCUV1H105JC	1	1
C406	ECUV1H102KBV	0.001	1
C407	ECUV1H102KBV	0.001	1
C408	ECUV1H102KBV	0.001	1
C409	ECUV1H102KBV	0.001	1
C410	PQCUV1H105JC	1	1
C411	ECUV1H103KBV	0.01	1
C412	ECUV1H561JCV	560P	1
C413	ECUV1H103KBV	0.01	1
		ACCESSORY	
A1	PQKC4Z5	BELT HOLDER	1
A2	KX-A11BX	AC ADAPTOR	1
A3	PQZXXT2330M	MOUNTING PARTS KIT	1
A4	PQJA50V	TELEPHONE CORD	1
A5	PQQX10774Z	INSTRUCTION BOOK	1
A6	PQQW10726Z	QUICK REFERENCE GUIDE (ENGLISH)	1
A7	Not Used		
A8	PQSA10014Y	ANNTENA	1
A9	RJP120ZS	PLUG ADAPTOR	1
		PACKING MATERIALS	
P1	XZB10X25A02	PROTECTION COVER	1
P2	PQPH89Y	PROTECTION COVER	1
P3	PQPN10270Z	CUSHION	1
P4	PQPN10271Z	ACCESSORY BOX	1
P5	PQPK10697Z	GIFT BOX	1
		FIXTURES AND TOOLS	
1	PQZZ10K7Z	EXTENTION CORD, 10P	1
2	PQZZ14K5Z	EXTENTION CORD, 14P	2
3	PQZZDA72	CERAMIC SCREWDRIVER FOR RF UNIT (VR302-VR305)	1
4	PQZZ9000BSXG	ID ROM WRITER	1
5	PQZZ1T9000M	VCO CHECKER FOR RF UNIT	1

Notes

1. PQZZ10K7Z, PQZZ14K5Z and PQZZDA72 are necessities for servicing.
2. PQZZ9000BSXG and PQZZ1T9000M are useful for servicing. (They make servicing easy.)

This replacement parts list is KX-T7980BX only.

REPLACEMENT PARTS LIST

PORTABLE HANDSET

Notes:

1. RTL (Retention Time Limited)
   The marking (RTL) indicates that the Retention Time is limited for this item.
   After the discontinuation of this assembly in production, the item will continue to be available for a specific period of time.
   The retention period of availability is dependent on the type of assembly, and in accordance with the laws governing part and product retention.
   After the end of this period, the assembly will no longer be available.
2. Important safety notice.
   Components identified by the ⚠ mark special characteristics important for safety.
   When replacing any of these components, use only manufacturer's specified parts.
3. The S mark indicates service standard parts and may differ from production parts.
4. RESISTORS & CAPACITORS
   Unless otherwise specified.
   All resistors are in ohms(Ω) k=1000Ω,M=1000kΩ
   All capacitors are in MICRO FARADS(μF) P=μμF
   *Type &Wattage of Resistor
   Type

ERC:Solid	ERX:Metal Film	PQ4R:Carbon
ERD:Carbon	ERG:Metal Oxide	ERS:Fusible Resistor
PQRD:Carbon	ER0:Metal Film	ERF:Cement Resistor

Wattage

10,16:1/8W	14,25:1/4W	12:1/2W	1:1W	2:2W	3:3W

*Type & Voltage of Capacitor
Type

ECFD:Semi-Conductor	ECCD,ECKD,ECBT,PQCBC : Ceramic
ECQS:Styrol	ECQE,ECQV,ECQG : Polyster
PQCUV:Chip	ECEA,ECSZ : Electrolytic
ECQMS:Mica	ECQP : Polyproplylene

Voltage

ECQ Type	ECQG ECQV Type	ECSZ Type	Others	
1H: 50V	05: 50V	0F:3.15V	0J :6.3V	1V :35V
2A:100V	1:100V	1A:10V	1A :10V	50,1H:50V
2E:250V	2:200V	1V:35V	1C :16V	1J :63V
2H:500V		0J:6.3V	1E,25:25V	2A :100V

Ref. No.	Part No.	Part Name & Description	Pcs
		CABINET PARTS	
K101	PQYMT7980BX	FRONT CABINET ASS'Y	1
K102	PQKF179R81	CABINET COVER	1
K103	PQBC269Z4	BUTTON, MUTE	1
K104	PQHR5400Z	COVER	1
K105	PQBD156Z5	KNOB, POWER	1
K106	PQSA815V	FLEXIBLE ANTENNA	1
K107	PQKE83Z5	DUMMY CLIP	1
K108	PQGD10058Z1	TEL. NO. CARD	1
K109	PQHR5308Z	TEL CARD COVER	1
K110	PQSE10005T	SWITCH 12KEY	1
K111	PQBC270Z3	BUTTON, RELEASE HOOK	1
K112	PQUS233Y	SPRING	1
K113	XSS26+4FZ	SCREW	2
K114	PQYC1T7980BX	FRONT LID ASSEMBLY	1
K115	PQYC2T7980BX	REAR LID ASSEMBLY	1
K116	PQZFT9000BSR	SHAFT ASSEMBLY	1
		ELECTRICAL PARTS	
E101	PQJP14G77Z	CONNECTOR, 14P (CN1)	1
E102	PQJS14X60Z	CONNECTOR, 14P (CN301)	1
E103	PQJT3124Y	CHARGE PLATE	2
E104	PQJT3125W	CHARGE PLATE	2
E105	XTN26+20C	SCREW	2
E106	XTN26+14J	SCREW	1
E107	PQAX3P14Z	SPEAKER	1

Ref. No.	Part No.	Part Name & Description	Pcs
		MAIN P. C. BOARD PARTS	
PCB 101	PQWP7980BXR	P.C. BOARD ASSEMBLY (RTL)	1
		(ICS)	
IC1	MN170801KAU	IC	1
IC2	PQVITC4001BF	IC	1
IC3	PQWIT9000XS	IC	1
IC4	PQVINJM2904F	IC	1
IC6	PQVIRH5RA45A	IC	1
IC7	PQVITS80745A	IC	1
IC8	AN6165SB	IC	1
IC9	PQVINJM2904F	IC	1
IC10	PQVINJM386M	IC	1
		(TRNSISTORS)	
Q1	2SC4116	TRANSISTOR(SI)	1
Q2	2SC4116	TRANSISTOR(SI)	1
Q3	PQVTDTC143EK	TRANSISTOR(SI)	1
Q4	XN4608	TRANSISTOR(SI)	1
Q5	XN4215	TRANSISTOR(SI)	1
Q6	PQVTDTB123E	TRANSISTOR(SI)	1
Q7	UN5216	TRANSISTOR(SI)	1
Q8	XN4501	TRANSISTOR(SI)	1
Q9	XN4501	TRANSISTOR(SI)	1
Q10	2SC4116	TRANSISTOR(SI)	1
Q11	PQVTDTB123E	TRANSISTOR(SI)	1
Q12	PQVTDTA143E	TRANSISTOR(SI)	1
Q13	PQVTDTB123E	TRANSISTOR(SI)	1
Q14	XN4608	TRANSISTOR(SI)	1
Q15	XN4501	TRANSISTOR(SI)	1
Q17	2SC4116	TRANSISTOR(SI)	1
		(DIODES)	
D1	MA8150	DIODE(SI)	1
D2	MA8047	DIODE(SI)	1
D3	PQVDSB703Q	DIODE(SI)	1
D5	MA141K	DIODE(SI)	1
D9	MA159	DIODE(SI)	1
D10	MA121	DIODE(SI)	1
D11	MA143	DIODE(SI)	1
D12	PQVDSB703Q	DIODE(SI)	1
D13	MA8047	DIODE(SI)	1
D14	MA141K	DIODE(SI)	1
D15	MA151WK	DIODE(SI)	1
D18	MA110	DIODE(SI)	1
D20	MA700A	DIODE(SI)	1
D80	MA110	DIODE(SI)	1
		(LEDS)	
D6	LN1261C	LED	1
D7	LN1261C	LED	1
D8	LN1361C	LED	1
		(CRYSTALS)	
X1	PQVCG4194N4Z	CRYSTAL, 4.194MHz	1

This replacement parts list is KX-T7980BX only.

Ref. No.	Part No.	Part Name & Description	Pcs
		(SWITCHES)	
S1	ESD165206	SWITCH, POWER	1
S2	ESE102MV1	SWITCH, OPEN/CLOSE DETECT	1
S3	PQSH1A44Z	SWITCH, MUTE	1
		(RESISTORS)	
R1	ERJ3GEYJ471	470	1
R2	ERJ3GEYJ224	220K	1
R3	ERJ3GEYJ103	10K	1
R4	ERJ3GEYJ224	220K	1
R5	ERJ3GEYJ152	1.5K	1
R6	ERJ3GEYJ184	180K	1
R7	ERJ3GEYJ223	22K	1
R8	ERJ3GEYJ102	1K	1
R10	ERJ3GEYJ104	100K	1
R11	ERJ3GEYJ563	56K	1
R13	ERJ3GEYJ223	22K	1
R15	ERJ3GEYJ102	1K	1
R16	ERJ3GEYJ221	220	1
R17	ERJ3GEYJ153	15K	1
R18	ERJ3GEYJ334	330K	1
R19	ERJ3GEYJ152	1.5K	1
R20	ERJ3GEYJ333	33K	1
R21	ERJ3GEYJ683	68K	1
R22	ERJ3GEYJ103	10K	1
R23	ERJ3GEYJ823	82K	1
R24	ERJ3GEYJ183	18K	1
R25	ERJ3GEYJ101	100	1
R26	ERJ3GEYJ273	27K	1
R27	ERJ3GEYJ273	27K	1
R28	ERJ3GEYJ223	22K	1
R29	ERJ3GEYJ153	15K	1
R30	ERJ3GEYJ153	15K	1
R31	ERJ3GEYJ103	10K	1
R32	ERJ3GEYJ563	56K	1
R33	ERJ3GEYJ470	47	1
R34	ERJ3GEYJ332	3.3K	1
R36	ERJ3GEYJ102	1K	1
R37	ERJ3GEYJ331	330	1
R38	ERJ3GEYJ332	3.3K	1
R39	ERJ3GEYJ820	82	1
R40	ERJ3GEYJ124	120K	1
R41	ERJ3GEYJ332	3.3K	1
R42	ERJ3GEYJ684	680K	1
R43	ERJ3GEYJ684	680K	1
R44	ERJ3GEYJ103	10K	1
R45	ERJ3GEYJ683	68K	1
R46	ERJ3GEYJ103	10K	1
R47	ERJ3GEYJ155	1.5M	1
R48	ERJ3GEYJ334	330K	1
R49	ERJ3GEYJ334	330K	1
R50	ERJ3GEYJ473	47K	1
R51	ERJ3GEYJ105	1M	1
R52	ERJ3GEYJ473	47K	1
R53	ERJ3GEYJ331	330	1
R54	ERJ3GEYJ102	1K	1
R55	ERJ3GEYJ331	330	1
R56	ERJ3GEYJ181	180	1
R57	ERJ3GEYJ394	390K	1
R58	ERJ3GEYJ104	100K	1
R59	ERJ3GEYJ823	82K	1
R60	ERJ3GEYJ561	560	1
R61	ERJ3GEYJ103	10K	1
R62	ERJ3GEYJ562	5.6K	1
R63	ERJ3GEYJ471	470	1
R64	ERJ3GEYJ821	820	1
R65	ERJ3GEYJ821	820	1
R66	ERJ3GEYJ822	8.2K	1
R67	ERJ3GEYJ223	22K	1

Ref. No.	Part No.	Value	Pcs
R68	ERJ3GEYJ473	47K	1
R69	ERJ3GEYJ104	100K	1
R70	ERJ3GEYJ223	22K	1
R71	ERJ3GEYJ223	22K	1
R72	ERJ3GEYJ223	22K	1
R73	ERJ3GEYJ223	22K	1
R74	ERJ3GEYJ562	5.6K	1
R75	ERJ3GEYJ562	5.6K	1
R76	ERJ3GEYJ822	8.2K	1
R77	ERJ3GEYJ103	10K	1
R78	ERJ3GEYJ684	680K	1
R79	ERJ3GEYJ103	10K	1
R80	ERJ3GEYJ822	8.2K	1
R81	ERJ3GEYJ270	27	1
R82	ERJ3GEYJ104	100K	1
R83	ERJ3GEYJ104	100K	1
R84	Not Used		
R85	ERJ3GEYJ223	22K	1
R86	ERJ3GEYJ223	22K	1
R87	ERJ3GEYJ682	6.8K	1
R88	ERJ3GEYJ104	100K	1
R89	ERJ3GEYJ104	100K	1
R90	ERJ3GEYJ104	100K	1
R91	ERJ3GEYJ104	100K	1
R92	ERJ3GEYJ104	100k	1
R93	ERJ3GEYJ104	100K	1
R94	ERJ3GEYJ104	100K	1
R95	ERJ3GEYJ104	100K	1
R96	ERJ3GEYJ104	100K	1
R97	ERJ3GEYJ104	100K	1
R98	ERJ3GEYJ104	100K	1
R99	ERJ3GEYJ104	100K	1
R100	ERJ3GEYJ102	1K	1
R101	ERJ3GEYJ105	1M	1
R102	ERJ3GEYJ104	100K	1
R103	ERJ3GEYJ104	100K	1
R104	PQ4R10XJ561	560	1
R105	ERJ3GEYJ103	10K	1
R106	ERJ3GEYJ473	47K	1
R107	ERJ3GEYJ225	2.2M	1
R110	ERJ3GEYJ223	22K	1
R121	ERJ3GEYJ333	33K	1
R122	ERJ3GEYJ333	33K	1
R130	ERJ3GEYJ102	1K	1
		(CAPACITORS)	
C1	ECUV1H104ZFV	0.1	1
C2	PQCUV1H105JC	1	1
C3	ECST0JX106	10	1
C4	ECUV1C224ZFV	0.22	1
C5	ECUV1H104ZFV	0.1	1
C6	ECUV1H104ZFV	0.1	1
C7	ECST0JC226	22	1
C10	ECUV1H104ZFV	0.1	1
C11	ECST0JY475	4.7	1
C12	ECST0JX106	10	1
C14	ECST0GC476	47	1
C15	ECUV1H562KBV	0.0056	1
C16	ECUV1H223KBV	0.022	1
C17	ECUV1H472KBV	0.0047	1
C18	ECUV1H104ZFV	0.1	1
C19	ECST0JX106	10	1
C20	ECUV1H561JCV	560P	1
C21	ECUV1H392KBV	0.0039	1
C22	ECUV1H104ZFV	0.1	1
C23	ECST0GX226	22	1
C24	ECST0JY475	4.7	1

This replacement parts list is KX-T7980BX only.

Ref. No.	Part No.	Value	Pcs
C25	ECUV1H153KBV	0.015	1
C26	ECUV1H331JCV	330P	1
C28	ECUV1C224ZFV	0.22	1
C30	ECUV1H473MDV	0.047	1
C31	ECUV1H682KBV	0.0068	1
C32	ECST0JX106	10	1
C33	ECUV1H333KDV	0.033	1
C34	ECUV1H333KDV	0.033	1
C35	ECUV1H562KBV	0.0056	1
C36	ECST0JX106	10	1
C37	ECUV1H180JCV	18P	1
C38	ECUV1H180JCV	18P	1
C39	PQCUV1E104MD	0.1	1
C40	ECST0JC226	22	1
C41	PQCUV1H105JC	1	1
C42	ECST0JX106	10	1
C43	ECST0JX106	10	1
C44	ECST0JX106	10	1
C45	PQCUV1H105JC	1	1
C47	ECUV1H104ZFV	0.1	1
C48	PQCUV1H105JC	1	1
C49	EECS5R5V224	0.22	1
C50	ECUV1H104ZFV	0.1	1
C52	PQCUV1H105JC	1	1
C55	ECUV1H562KBV	0.0056	1
C61	ECUV1H272KBV	0.0027	1
C62	ECUV1H681JCV	680P	1
C80	ECST0GX226	22	1
C150	ECUV1H560JCV	56P	1
C180	ECUV1H331JCV	330P	1
C181	ECUV1H101JCV	100P	1
		RF UNIT P. C. BOARD PARTS	
PCB102	PQWU7980BX	P.C. BOARD ASSEMBLY (RTL)	1
		(ICS)	
IC301	PQVIMC3361D	IC	1
IC302	PQVINJM2903M	IC	1
IC303	PQVIM54958FP	IC	1
IC304	PQVINJM2904F	IC	1
IC305	PQVITC4S66F	IC	1
		(TRANSISTORS)	
Q302	2SC4099NT106	TRANSISTOR(SI)	1
Q303	PQVTSGM2006M	TRANSISTOR(SI)	1
Q304	2SC4226R24	TRANSISTOR(SI)	1
Q305	2SC4184T43	TRANSISTOR(SI)	1
Q306	2SC4226R24	TRANSISTOR(SI)	1
Q307	2SC4226R24	TRANSISTOR(SI)	1
Q308	2SC4226R24	TRANSISTOR(SI)	1
Q309	2SC4226R24	TRANSISTOR(SI)	1
Q310	2SC4226R24	TRANSISTOR(SI)	1
Q311	2SC3356R24	TRANSISTOR(SI)	1
Q312	2SC4571R77	TRANSISTOR(SI)	1
Q313	2SC4571R77	TRANSISTOR(SI)	1
Q317	UN5112	TRANSISTOR(SI)	1
		(DIODES)	
D301	MA125	DIODE(SI)	1
D303	MA141K	DIODE(SI)	1
D304	PQVD1SV214	VARISTOR	1
D305	PQVD1SV214	VARISTOR	1
D306	MA141WK	DIODE(SI)	1

Ref. No.	Part No.	Part Name & Description	Pcs
		(CRYSTALS)	
X301	PQVCG2094N4R	CRYSTAL, 20.94MHz	1
X302	PQVCAT27N128	CRYSTAL, 12.8MHz	1
		(VARIABLE RESISTOR)	
VR302	EVM1SSX50B24	VARIABLE RESISTOR, 20KΩ (B)	1
VR303	EVM1SSX50B24	VARIABLE RESISTOR, 20KΩ (B)	1
VR304	Not Used		
VR305	EVM1SSX50B53	VARIABLE RESISTOR, 5KΩ (B)	1
		(COILS)	
L301	EIV4EJ004E	COIL	1
L302	PQLRI001	COIL	1
L303	PQLQR1F8N8J	COIL	1
L304	PQLQR1F8N8J	COIL	1
L305	PQLQR1F8N8J	COIL	1
		(SAW FILTERS)	
F301	PQVS705H904	SAW FILTER	1
F302	EZFB903AM01	SAW FILTER	1
F303	PQVCM214M15A	SAW FILTER	1
F304	PQVCM214M15A	SAW FILTER	1
F305	PQVFCFUM455E	SAW FILTER	1
F306	EZFB814AM01	SAW FILTER	1
		(VARIABLE CAPACITORS)	
VC301	PQCVTZC060	TRIMMER CAPACITOR	1
VC302	PQCVTZC060	TRIMMER CAPACITOR	1
		(RESISTORS)	
R302	ERJ3GEYJ224	220K	1
R303	Not Used		
R304	ERJ3GEYJ333	33K	1
R305	ERJ3GEYJ153	15K	1
R306	Not Used		
R307	ERJ3GEYJ473	47K	1
R308	ERJ3GEYJ152	1.5K	1
R309	ERJ3GEYJ102	1K	1
R310	ERJ3GEYJ333	33K	1
R311	ERJ3GEYJ184	180K	1
R312	ERJ3GEYJ334	330K	1
R313	ERJ3GEYJ104	100K	1
R314	Not Used		
R315	Not Used		
R316	ERJ3GEYJ681	680	1
R317	ERJ3GEYJ471	470	1
R318	ERJ3GEYJ474	470K	1
R319	ERJ3GEYJ331	330	1
R320	ERJ3GEYJ103	10K	1
R321	ERJ3GEYJ101	100	1
R322	ERJ3GEYJ104	100K	1
R323	ERJ3GEYJ101	100	1
R324	ERJ3GEYJ333	33k	1
R325	ERJ3GEYJ101	100	1
R327	ERJ3GEYJ333	33k	1
R328	ERJ3GEYJ470	47	1
R329	ERJ3GEYJ150	15	1
R330	ERJ3GEYJ392	3.9K	1
R331	ERJ3GEYJ222	2.2K	1
R332	ERJ3GEYJ562	5.6K	1
R333	ERJ3GEYJ331	330	1
R334	ERJ3GEYJ104	100K	1
R335	ERJ3GEYJ221	220	1

This replacement parts list is KX-T7980BX only.

Ref. No.	Part No.	Part Name & Description	Pcs
R336	ERJ3GEYJ681	680	1
R337	ERJ3GEYJ103	10K	1
R338	ERJ3GEYJ103	10K	1
R339	ERJ3GEYJ103	10K	1
R340	ERJ3GEYJ682	6.8K	1
R341	ERJ3GEYJ471	470	1
R342	ERJ3GEYJ471	470	1
R343	ERJ3GEYJ272	2.7K	1
R344	ERJ3GEYJ221	220	1
R345	ERJ3GEYJ224	220K	1
R346	ERJ3GEYJ273	27K	1
R347	ERJ3GEYJ273	27K	1
R348	ERJ3GEYJ681	680	1
R350	ERJ3GEYJ271	270	1
R351	ERJ3GEYJ470	47	1
R352	ERJ3GEYJ392	3.9K	1
R353	ERJ3GEYJ562	5.6K	1
R354	ERJ3GEYJ222	2.2K	1
R355	ERJ3GEYJ151	150	1
R356	ERJ3GEYJ470	47	1
R358	ERJ3GEYJ223	22K	1
R360	ERJ3GEYJ101	100	1
R361	ERJ3GEYJ103	10K	1
R362	ERJ3GEYJ100	10	1
R363	ERJ3GEYJ472	4.7K	1
R365	ERJ3GEYJ100	10	1
R370	ERJ3GEYJ123	12K	1
R373	ERJ3GEYJ334	330K	1
R374	ERJ3GEYJ822	8.2K	1
R375	ERJ3GEYJ103	10K	1
R376	ERJ3GEYJ183	18K	1
R377	ERJ3GEYJ183	18K	1
R378	ERJ3GEYJ123	12K	1
R379	ERJ3GEYJ101	100	1
R380	ERJ3GEYJ101	100	1
R381	ERJ3GEYJ103	10K	1
R382	Not Used		
R383	ERJ3GEYJ100	10	1
R384	ERJ3GEYJ103	10K	1
R385	ERJ3GEYJ473	47K	1
R386	Not Used		
R387	ERJ3GEYJ222	2.2K	1
R388	ERJ3GEYJ102	1K	1
R389	ERJ3GEYJ223	22K	1
R390	ERJ3GEYJ223	22K	1
R391	ERJ3GEYJ103	10K	1
R392	ERJ3GEYJ153	15K	1
R396	ERJ3GEYJ0R00	0	1
R403	PQ4R10XJ000	0	1
R901	ERJ3GEYJ104	100K	1
J11	ERJ3GEYJ000	0	1

Ref. No.	Part No.	Value	Pcs
		(CAPACITORS)	
C300	ECUV1H020CCV	2P	1
C301	Not Used		
C302	PQCUV1E473MD	0.047	1
C303	ECUV1H102KBV	0.001	1
C304	ECUV1H102KBV	0.001	1
C305	Not Used		
C306	PQCUV1H223KB	0.022	1
C307	Not Used		
C308	Not Used		
C309	ECUV1H101JCV	100P	1
C310	ECUV1H102KBV	0.001	1
C311	PQCUV1E104MD	0.1	1
C312	PQCUV1E104MD	0.1	1
C313	ECUV1H680JCV	68P	1
C314	ECUV1H180JCV	18P	1
C315	ECUV1H180JCV	18P	1
C316	ECUV1H060DCV	6P	1
C317	ECUV1H102KBV	0.001	1
C318	ECUV1H102KBV	0.001	1
C319	ECUV1H680JCV	68P	1
C320	ECUV1H1R5CCV	1.5P	1
C321	ECUV1H050CCV	5P	1
C322	ECUV1H102KBV	0.001	1
C323	ECUV1H030CCV	3P	1
C324	ECUV1H030CCV	3P	1
C325	Not Used		
C327	ECUV1H102KBV	0.001	1
C328	ECUV1H050CCV	5P	1
C329	ECUV1H102KBV	0.001	1
C330	ECUV1H102KBV	0.001	1
C331	ECUV1H020CCV	2P	1
C333	ECEV0JV330	33P	1
C334	ECUV1H102KBV	0.001	1
C335	ECUV1H020CCV	2P	1
C336	ECUV1H270JCV	27P	1
C337	ECUV1H020CCV	2P	1
C338	ECUV1H090DCV	9P	1
C339	ECUV1H102KBV	0.001	1
C340	ECUV1H010CCV	1P	1
C341	ECUV1H080DCV	8P	1
C342	ECUV1H060CCV	6P	1
C343	ECUV1H030CCV	3P	1
C344	ECUV1H040CCV	4P	1
C345	ECUV1H080DCV	8P	1
C346	ECUV1H060DCV	6P	1
C347	ECUV1H180JCV	18P	1
C348	ECUV1H103KBV	0.01	1
C349	ECUV1H103KBV	0.01	1
C351	PQCUV1H223KB	0.022	1
C352	ECUV1H102KBV	0.001	1
C356	Not Used		
C357	ECST1CY105	1	1
C360	ECUV1H102KBV	0.001	1
C361	PQCUV1H333JC	0.033	1
C362	ECST1CY225	2.2	1
C363	ECUV1H030CCV	3P	1
C364	ECUV1H080DCV	8P	1
C365	ECUV1H102KBV	0.001	1
C366	PQCUV1H333JC	0.033	1
C367	ECUV1H562KBV	0.0056	1
C369	ECUV1H0R5CCV	0.5P	1
C370	ECUV1H040CCV	4P	1
C371	ECST0JC336	33	1
C372	ECUV1H102KBV	0.001	1
C373	ECUV1H080DCV	8P	1
C374	ECUV1H080CCV	8P	1
C375	ECUV1H180JCV	18P	1
C376	ECUV1H040CCV	4P	1
C377	ECUV1H030CCV	3P	1

This replacement parts list is KX-T7980BX only.

Ref. No.	Part No.	Value	Pcs
C378	ECUV1H080DCV	8P	1
C379	ECUV1H101JCV	100P	1
C380	ECUV1H102KBV	0.001	1
C382	ECUV1H080DCV	8P	1
C383	ECUV1H102KBV	0.001	1
C385	ECUV1H040CCV	4P	1
C386	ECUV1H080DCV	8P	1
C388	ECUV1H040CCV	4P	1
C389	ECUV1H102KBV	0.001	1
C391	ECUV1H100DCV	10P	1
C392	ECUV1H102KBV	0.001	1
C393	Not Used		
C396	PQCUV1H223KB	0.022	1
C397	ECUV1H103KBV	0.01	1
C398	ECUV1H103KBV	0.01	1
C399	ECUV1H103KBV	0.01	1
C400	PQCUV1H105JC	1	1
C401	ECUV1H822KBV	0.0082	1
C402	ECUV1H562KBV	0.0056	1
C404	ECUV1H102KBV	0.001	1
C405	PQCUV1H105JC	1	1
C406	ECUV1H102KBV	0.001	1
C407	ECUV1H102KBV	0.001	1
C408	ECUV1H102KBV	0.001	1
C409	ECUV1H102KBV	0.001	1
C410	PQCUV1H105JC	1	1
C411	ECUV1H103KBV	0.01	1
C412	ECUV1H561JCV	560P	1
C413	ECUV1H103KBV	0.01	1
		ACCESSORY	
A1	PQKC4Z5	BELT HOLDER ⚠	1
A2	KX-A11BX	AC ADAPTOR	1
A3	PQZXXT2330M	MOUNTING PARTS KIT	1
A4	PQJA59V	TELEPHONE CORD	1
A5	PQQX10774Z	INSTRUCTION BOOK	1
A6	PQQW10726Z	QUICK REFERENCE GUIDE (ENGLISH)	1
A7	PQSA10014Y	ANNTENA	1
A8	RJP120ZS	PLUG ADAPTOR	1
		PACKING MATERIALS	
P1	XZB10X25A02	PROTECTION COVER	1
P2	PQPH89Y	PROTECTION COVER	1
P3	PQPN10270Z	CUSHION	1
P4	PQPN10271Z	ACCESSORY BOX	1
P5	PQPK10697Z	GIFT BOX	1
		FIXTURES AND TOOLS	
1	PQZZ10K7Z	EXTENTION CORD, 10P	1
2	PQZZ14K5Z	EXTENTION CORD, 14P	2
3	PQZZDA72	CERAMIC SCREWDRIVER FOR RF UNIT (VR302-VR305)	1
4	PQZZ9000BSXG	ID ROM WRITER	1
5	PQZZ1T9000M	VCO CHECKER FOR RF UNIT	1

Notes

1. PQZZ10K7Z, PQZZ14K5Z and PQZZDA72 are necessities for servicing.
2. PQZZ9000BSXG and PQZZ1T9000M are useful for servicing. (They make servicing easy.)